1

Machine Identification & Bearing Information

Section Outline Page

1.1 IP CODE FOR ROTATING ELECTRICAL MACHINES 1-4

1.2 DATE CODES, TYPE DESIGNATIONS, MODEL NUMBER SYSTEMS, AND BEARING INFORMATION FOR VARIOUS MANUFACTURERS..... 1-5

A.O. Smith Electrical Products Co. 1-5
(Now part of Regal-Beloit Corp.)

AEG 1-7
(Formerly Alsthom Automation Systems, now Parker Bayside)

Allis-Chalmers Mfg. Co. 1-10
(Data from Pennsylvania Electric Coil)

Arco Electric Products Corp. 1-15

ASEA 1-16
(Now ABB Industrial Systems)

Baldor Electric Co. 1-19

Baumuller Nurnberg 1-23
(U.S. Agent: Electric Motor Corp.)

Bharat Bijee, Ltd. 1-24

Brook Hansen; Brook Hansen (Canada), Inc. 1-25
(Now Brook Crompton N.A.)

Brown-Boveri Corp. 1-31
(Now ABB Industrial Systems)

Century Electric, Inc. 1-35
(Became MagneTek, now A.O. Smith, part of Regal-Beloit Corp.)

Crocker-Wheeler/Elliott..... 1-40
(Out of business; contact Jasper Electric, Jasper, AL)

Crompton Parkinson..... 1-41
(Now Brook Crompton N.A.)

Disclaimer: The information in this document was carefully prepared and is believed to be correct, but EASA makes no warranties respecting it and disclaims any responsibility or liability of any kind for any loss or damage as a consequence of anyone's use of or reliance upon such information.

Section Outline Page

Delco Products 1-42
(Now Lincoln Motors, part of Regal-Beloit Corp.)
Doerr Electric Corp. 1-44
(Plant closed. For data, contact Nidec Motor Corp.)
Dresser Crane 1-45
(Now Lift Tech International)
Dyna Corp. 1-46
(Formerly Brown & Brockmeyer, now out of business)
Eaton Corp. 1-47
(Now Dynamatic Corp.)
Eberle, S.A. 1-48
Electra Gear Operations 1-52
Electric Apparatus Co. 1-56
Elektrim Motor Div., Toolmex Corp. 1-57
Elin 1-59
(U.S. agent: American Elin Corp.)
Elliott Co. 1-60
(Formerly Crocker-Wheeler, now out of business)
Emerson Electric Co. 1-61
(Became Emerson Motor Technologies, now Nidec Motor Corp.)
Fairbanks Morse 1-62
(Out of business)
Franklin Electric Co. 1-67
G. Bauknecht 1-68
(Now Loher Drive Systems)
Galis Div., FMC Corp. 1-69
(Out of business)
GEC Electromotors 1-70
(Became Electrodrives, Ltd.; now Brook Crompton Blackheath)
General Electric Co. 1-74
General Electric (Canada), Motor Div. 1-74
Howell Electric Motors 1-78
Ideal Electric & Mfg. Co. 1-81
Imperial Electric Co. 1-82
International Electric Corp./Baylor 1-83
(Now National Oilwell)
Katolight Corp. 1-84
Kirloskar Electric Co., Ltd. 1-86
Leeson Electric Corp. 1-87
(Part of Regal-Beloit Corp.)
Leland Faraday Electric Co. 1-89
Leroy-Somer, Inc. 1-90
(Now U.S. Motors, Nidec Motor Corp.)
Lima Electric Co. 1-93
(Now Marathon Electric Mfg. Corp., part of Regal-Beloit Corp.)
Lincoln Electric Co. 1-95
(Now Lincoln Motors, part of Regal-Beloit Corp.)

EASA Technical Manual © 1996-2012, Electrical Apparatus Service Association, Inc.

Section Outline Page

Loher Drive Systems 1-97
(Part of Flender ATB-Loher)
Louis Allis Co. 1-101
(Out of business)
Marathon Electric Mfg. Corp. 1-112
(Part of Regal-Beloit Corp.)
Master Electric 1-116
(Now Relianace Electric Co., part of Baldor Electric Co.)
Newman Electric Motors 1-117
(Now Brook Crompton N.A.)
Peerless-Winsmith, Inc. 1-121
Pope Electric Motors 1-122
(Out of business)
Reliance Electric Co. 1-123
(Now part of Baldor Electric Co.)
Reuland Electric Co. 1-128
Robbins & Myers 1-130
Ronk Electrical Industries, System Analyzer Div. 1-133
SEW-Eurodrive, Inc. 1-134
(Formerly Eurodrive, Inc.)
Siemens, Siemens Allis Industrial Motor Div. 1-136
(Now Siemens Industry, Inc.)
Sterling Electric, Inc. 1-142
Stromberg 1-145
(U.S. Agent: ABB Industrial Systems)
Sumitomo Machinery Corp. of America 1-146
TECO American, Inc. 1-150
(Now TECO-Westinghouse Motor Co.)
Toshiba/Houston Int'l Corp., Industrial Div. 1-158
U.S. Electrical Motors 1-164
(Now U.S. Motors, A Brand of Nidec Motor Corp.)
Wagner Electric Corp. 1-189
(Out of business)
WEG Electric Motors Corp. 1-191
Westinghouse Electric Corp. 1-196
(Now TECO-Westinghouse Motor Co.)
Westinghouse Canada 1-196
(Now Siemens Westinghouse, Inc.)
Winpower, Inc. 1-201
1.3 REFERENCED STANDARDS 1-202

1.1 IP CODE FOR ROTATING ELECTRICAL MACHINES

The Standards* for IP Codes apply to the classification of degrees of protection provided by enclosures for all rotating machines.

The designation used for the degree of protection consists of the letters IP (International Protection) followed by two characteristic numerals.

EXAMPLE OF DESIGNATION

IP 4 4

Characteristic letters

First characteristic numeral

Second characteristic numeral

When the degree of protection is specified by only one numeral, the omitted numeral is replaced by the letter X. For example, IPX5 or IP2X.

The First Characteristic Numeral indicates the degree of protection provided by the enclosure with respect to persons and also to the parts of the machine inside the enclosure.

The Second Characteristic Numeral indicates the degree of protection provided by the enclosure with respect to harmful effect due to ingress of water.

The two characteristic numerals signify conformity with the conditions indicated in Table 1.

*Reference: NEMA Stds. MG 1-2009, Rev. 1-2010, 5.2, 5.2.1 and 5.3.1.

TABLE 1: DEGREES OF PROTECTION INDICATED BY THE TWO CHARACTERISTIC NUMERALS

First characteristic numeral	Degree of protection	Second characteristic numeral	Degree of protection
0	Non-protected machine	0	Non-protected machine
1	Machine protected against solid objects greater than 1.968 inches (50 mm)	1	Machine protected against dripping water
2	Machine protected against solid objects greater than 0.4724 inches (12 mm)	2	Machine protected against dripping water when tilted up to 15°
3	Machine protected against solid objects greater than 0.0984 inches (2.5 mm)	3	Machine protected against spraying water
4	Machine protected against solid objects greater than 0.0394 inches (1 mm)	4	Machine protected against splashing water
5	Dust-protected machine	5	Machine protected against water jets
6*	Dust-tight machine	6	Machine protected against heavy seas
		7	Machine protected against the effects of immersion
		8	Machine protected against continuous submersion

* Not included in IEC Stds. 60034-5, 1991.
Reference: NEMA Stds. MG 1-2009, Rev. 1-2010, 5.3, Tables 5-1 and 5.2.
IEC Stds. 60034-5, 1991.

CLASSIFICATION ACCORDING TO ENVIRONMENTAL PROTECTION

IP Code	Classification	IP Code	Classification
IP00	Open machine	IP44	Totally-enclosed, pipe-ventilated machine
IP12	Dripproof machine	IP55	Water-proof machine
IP13	Splash-proof machine		

Reference: NEMA Stds. MG 1-2009, Rev. 1-2010, 1.25, 1.26 and 1.27.

EASA Technical Manual © 1996-2012, Electrical Apparatus Service Association, Inc.

1.2 DATE CODES, TYPE DESIGNATIONS, MODEL NUMBER SYSTEMS, AND BEARING INFORMATION FOR VARIOUS MANUFACTURERS

A.O. SMITH ELECTRICAL PRODUCTS CO.

(Now part of Regal-Beloit Corp.)

DATE CODES

Serial number or date code: First digit (number) designates manufacturing plant; second digit (letter) is month of manufacture; third and fourth digits indicate the year of manufacture.

A - January	E - May	I - September
B - February	F - June	J - October
C - March	G - July	K - November
D - April	H - August	L - December

TYPE DESIGNATIONS

Model descriptions

Example

Factory model number C48J2DB5B3 (Distributor Stock Number K1052) is a single phase, capacitor start, 1/2 hp, 3450 rpm, C flange pump motor.

Factory model number F48SJ6MA5A1 is a single phase, permanent split capacitor, 48 FR., 1-1/2" stack, 6 pole, sleeve bearing, non-through bolt motor.

The model number is arranged in 7 basic identifying segments

——	C	48	J	2	DB	5	B
	(1)	(2)	(3)	(4)	(5)	(6)	(7)
——	F	48	SJ	6	MA	5	A

1. Letter code to designate general electrical design:
   - C - Single phase, capacitor start
   - P - Polyphase
   - S - Single phase, split phase
   - F - Single phase, permanent split capacitor
   - K - Single phase, capacitor start and run

2. Two digits to designate frame diameter (not NEMA mounting dimensions):
   - 48 - Dimension 5-5/8"
   - 56 - Dimension 6-9/16"

3. Letter code to designate horsepower:
   - G - 1/4 hp
   - H - 1/3 hp
   - J - 1/2 hp
   - K - 3/4 hp
   - L - 1 hp
   - M - 1-1/2 hp
   - N - 2 hp
   - P - 3 hp
   - R - 5 hp

   OR

   Stack Length
   - SA - 1/2
   - SB - 5/8
   - SC - 3/4
   - SD - 7/8
   - SE - 1
   - SF - 1-1/8
   - SG - 1-1/4
   - SH - 1-3/8
   - SJ - 1-1/2
   - SK - 1-5/8
   - SL - 1-3/4
   - SM - 1-7/8
   - SN - 2
   - SP - 2-1/4
   - SQ - 2-1/2
   - SR - 2-3/4
   - SS - 3
   - ST - 3-1/4
   - SU - 3-1/2
   - SV - 3-3/4
   - SW - 4
   - SX - 4-1/4
   - SY - 4-1/2
   - SZ - 4-3/4

4. One digit designates motor speed (number of poles):
   - 2 - 3450 rpm
   - 4 - 1725 rpm
   - 6 - 1075 rpm
   - 8 - 825 rpm

TYPE DESIGNATIONS—CONTINUED

5. One or two letters designate application type:

A	-	Early designs, can be either pump or blower motors
C, CA	-	Base mounted motor
D, DA, DB	-	C-flange pump motors and partial pump motors
E, EA, EB, EC	-	Special flange pump motors
F, FA, FB, FC	-	Special flange pump motors
L	-	Rigid sleeve bearing
MA	-	Self-align, sleeve bearing, non-through bolt construction
MB	-	Self-align, sleeve bearing, through bolt construction
N	-	C-flange swimming pool pump motors
PA, PM, P	-	Special flange pump motors
S	-	Special flange pump motors
T	-	Base-mounted motors
U	-	C-flange pump motors
V	-	Ball bearing construction

6. One, two or three digits designate features too numerous to list.

7. One letter and one or more digits designate modifications:

A	-	Mechanical modification
B	-	Electrical modification
C	-	Mechanical and electrical modifications

BEARING INFORMATION

SINGLE PHASE

Frame	Front bearing	Drive bearing
48	203	203
56	203	203
66	203	204
203	305	305
204	305	305
224	305	305
225	305	305

POLYPHASE

Frame	Front bearing	Drive bearing
58	203	203
66	203	204
203-204	305	305
224-225	306	306
254	307	307
324-326	210	210
364-365	311	3t1
404-405	312	312
444-445	315	315

EASA Technical Manual © 1996-2012, Electrical Apparatus Service Association, Inc.

AEG

(Formerly Alsthom Automation Systems, now Parker Bayside)

BEARING INFORMATION

TOTALLY-ENCLOSED, FAN-COOLED

Frame	Poles	Drive bearing (standard)	Non-drive bearing	Drive roller bearing (special design)
56	2 & 4	6000	6000	
63	2 & 4	16002	16002	
71	2 - 8	6202	6202	
80	2 - 8	6004	6004	
90	2 - 8	6205C3	6205ZC3	
100	2 - 8	6206C3	6205ZC3	
112	2 - 8	6306C3	6206ZC3	
132SP, SR	2 - 8	6208ZC3	6206ZC3	
132SS, SV	2 - 8	6308ZC3	6206ZC3	
132MP, MR	2 - 8	6208ZC3	6208ZC3	
132MS, MV	2 - 8	6308ZC3	6208ZC3	
160MP, MV	2 - 8	6209ZC3	6208ZC3	
160MS, MV	2 - 8	6309ZC3	6208ZC3	
160LP, LR	2 - 8	6210C3	6210C3	NU210
180	2 - 8	6210C3	6210C3	NU210
200	2 - 8	6212C3	6212C3	NU212
225	2 - 8	6213C3	6213C3	NU213
250	2 -12	6214C3	6214C3	NU214
280	2 -12	6216C3	6216C3	NU216
315	2	6216C3	6216C3	
315	4 -12	6220C3	6220C3	NU220E
355	2	6316C3	6316C3	
355	4 -12	6222C3	6222C3	NU222E
400	2	6317C3	6317C3	
400	4 -12	6324C3	6324C3	NU324C3

Frames 56 to 80
Drive end: Floating bearing
Non-drive end: Floating bearing, spring loaded
Direction of axial force: Only towards drive end
(If opposite direction of force is required: Spring loaded at drive end).

Frames 90 to 400
Drive end: Floating bearing, spring loaded
Non-drive end: Fixed bearing
Direction of axial force: As required

Frames 132 to 355 (AMV)
Drive end: Fixed bearing
Non-drive end: Floating bearing, spring loaded
Direction of axial force: As required

BEARING INFORMATION—CONTINUED

EXPLOSION-PROOF

Frame	Poles	Drive bearing (standard)	Non-drive bearing	Drive roller bearing (special design)
63	2 & 4	16002	6002Z	
71	2 & 4	6202	6202	
80	2 - 6	6004	6004Z	
90	2 - 6	6205C3	6205ZC3	
100	2 - 8	6206C3	6205ZC3	
112	2 - 8	6306C3	6206ZC3	
132S	2 - 8	6308ZC3	6206ZC3	
132M	2 - 8	6308ZC3	6208ZC3	
160M	2 - 8	6309ZC3	6208ZC3	
160L	2 - 8	6210C3	6210C3	NU210
180	2 - 8	6210C3	6210C3	NU210
200	2 - 8	6212C3	6212C3	NU212
225	2 - 8	6213C3	6213C3	NU213
250	2 - 8	6214C3	6214C3	NU214
280	2 - 8	6216C3	6216C3	NU216
315	2	6216C3	6216C3	
315	4 - 8	6220C3	6220C3	NU220E
355	2	6316C3	6316C3	
355	4 - 8	6222C3	6222C3	NU222E

Frame 63
Drive end: Floating bearing, spring loaded
Non-Drive end: Fixed bearing
Direction of axial force: As required

Frame 71
Drive end: Floating bearing
Non-drive end: Floating bearing, spring loaded
Direction of axial force: Only towards drive end
(If opposite direction of force is required: Spring loaded at drive end).

Frame 80
Drive end: Fixed bearing
Non-Drive end: Floating bearing, spring loaded
Direction of axial force: As required

Frames 90 to 355
Drive end: Floating bearing, spring loaded
Non-drive end: Fixed bearing
Direction of axial force: As required

EASA Technical Manual © 1996-2012, Electrical Apparatus Service Association, Inc.

BEARING INFORMATION—CONTINUED

DRIPPROOF

Frame	Poles	Drive bearing	Non-drive bearing
160	2 - 8	6210C3	6210C3
180	2 - 8	6212C3	6212C3
200	2 - 8	6213C3	6213C3
225	2 - 8	6214C3	6213C3
250	2 - 10	6216C3	6214C3
280	2	6214C3	6214C3
280	4 & Up	6218C3	6216C3
315	2	6216C3	6216C3
315	4 & Up	6220C3	6218C3
355	2	6316C3	6316C3
355	4 & Up	6222C3	6320C3

Frames 160 to 355
Drive end: Floating bearing, spring loaded
Non-drive end: Fixed bearing
Direction of axial force: As required

ALLIS-CHALMERS MFG. CO.

(Data from Pennsylvania Electric Coil)

SERIAL NUMBERS AND DATE CODES

MOTOR AND GENERATOR SERIAL NUMBER RECORD–WEST ALLIS WORKS

APPROXIMATE DATE OF MANUFACTURE–SERIAL NUMBERS ASSIGNED AS OF JANUARY 1ST OF YEAR INDICATED

Year	Machine serial number	Shipping	Special	Order numbers	
				Shipping (DC)	Special (DC)
1951	152987	1-05-99744	2-05-25329	1-04-11429	2-04-5621
1952	154393	1-05-01130	2-05-26050	1-04-12090	2-04-5996
1953	154927	1-05-02574	2-05-26390	1-04-12496 (1)	2-04-6090 (1)
1954	156347	1-05-04412	2-05-26669		
1955	156689	1-0500-02934	5-0510-00039		
1956	158016	1-0500-06320	2-0510-27171		
1957	158373	1-0740-32020	2-0550-27234		
1958	158839	1-0500-10163	2-0510-27914		
1959	160110	9-0500-01040	2-0550-28202		
1960	160453	1-0500-12604	2-0530-28478		
1961	160941	1-0500-14081	2-0530-28910		
1962	30004	1-0500-30003	2-0510-30004		
1963	32159	1-1000-00326	2-0589-32159		
1964	33392	9-0501-33392	9-0501-33392		

This record is published primarily to furnish an indication of the age of machines built at West Allis Works, for which replacement or spare parts may be required.

The Machine Serial Number is the serial number appearing on the name plate. The serial number stamped on the end of the shaft will usually be different.

Shipping Order Numbers. Shipping order numbers are those which cover all of any number of machines and their accessory equipment; spare parts or repair parts, received on an order or requisition. These have been used as follows:

1-05 Numbers–These have been used for AC machines since 1943, the 05 introducing the product classification into the order number.

Since Sept. 1952, this category also includes all DC machines and motor-generator sets converting from AC to DC.

1-04 and 2-04 Numbers–These have been used for DC machines and motor-generator sets converting from AC to DC, the 04 introducing the product classification into the order number.

This product classification has been discontinued and is now included in the 05 classification, as indicated above.

(1) Indicates terminating numbers in the 04 classifications.

Special Order Numbers. These are the manufacturing order numbers on which the individual machine is built. These have been used for the individual machine in the same manner as indicated above for General Order Numbers.

Little Rock & Norwood Plants
Motors manufactured at Little Rock and Norwood are date coded in the model number blank on the nameplate.

First Digit – 1 - Manufactured at Norwood
6 - Manufactured at Little Rock
Second Digit – Quarter of the Year
Third Digit – Last digit in Year

EASA Technical Manual © 1996-2012, Electrical Apparatus Service Association, Inc.

TYPE DESIGNATIONS

Motor types are formed by combining letters from the following groups:

1. Basic Type Designations

A - Tube type, air-to-air heat exchanger
F - Weather protected
G - General purpose, dripproof, Design B, "U" frame
HS - Hollow shaft, vertical motor with P base
HSO - Normal thrust
HSMG - Medium thrust
HSHG - High thrust
HSZ - High thrust, fan-cooled
HSZZ - High thrust, explosion-proof, fan- cooled
RG - General purpose, dripproof, Design B, "T" frame

2. Mechanical Modifications

P - Pipe ventilated (high speed over 200 hp)
CH - Severe service
F - C or D flange, horizontal operation
K - Totally-enclosed, non-ventilated
KK - Totally-enclosed, non-ventilated, explosion-proof
L - Textile type loom motor
OD - Weather protected
Q - Self-cleaning textile motor
S - Super seal, VPI sealed insulation system
V - Vertical motors, normal or high thrust, solid shaft with C, D or P flange
Z - Fan-cooled
ZZ - Fan-cooled, explosion-proof

3. Electrical Modifications

H - High torque, high slip, Design D
L - Elevator type, squirrel cage
R - Roving frame textile motor
SYN - Synduction motor, synchronous motor without DC excitation
T - Design C
Y - Wound rotor

Some designations for pre-NEMA motors

AP, AR - Open
AW - Open, belt drive
AWB - Synchronous
AZ - Tube cooled
AZZ - Tube cooled, explosion-proof
WW - Splash-proof

BEARING INFORMATION

STANDARD ROLLING BEARINGS FOR MOTORS BUILT AT NORWOOD (OHIO) PLANT
SQUIRREL CAGE INDUCTION MOTORS–NEMA SIZES

Frame size	Type of motor*						Front bearing	Rear bearing	
	G GS	GK GKK	GZ GZZ	RG RGS	RGK RGKK	RGZ RGZZ		Direct connected	Belted
143T-145T				RG(S)	RGK(K)	RGZ(Z)	17BC02JPP0	25BC02JPP0	25BC02JPP0
182-184	G(S)	GK(K)	GZ(Z)				20BC02JPP0	25BC02JPP0	25BC02JPP0
182T-184T				RG(S)	RGK(K)	RGZ(Z)	20BC02JPP0	30BC02JPP0	30BC02JPP0
213-215	G(S)		GZ(Z)				25BC02JPP0	30BC02JPP0	30BC02JPP0
213-215		GK(K)					30BC02JPP0	30BC02JPP0	30BC02JPP0
213T-215T				RG(S)	RGK(K)	RGZ(Z)	30BC02JPP0	40BC02JPP0	40BC02JPP0
254U-256U	G(S)	GK(K)					40BC03JPP3	40BC03JPP3	40BC03JPP3
254U-256U			GZ(Z)				35BC03JPP0	40BC03JPP3	40BC03JPP3
254T-256T				RG(S)			45BC02JPP3	45BC02JPP3	45BC02JPP3
254T-256T					RGK(K)	RGZ(Z)	40BC02JPP0	45BC02JPP3	45BC02JPP3
284U-286U	G(S)	GK(K)					45BC03JPP3	45BC03JPP3	45BC03JPP3
284U-286U			GZ(Z)				40BC03JPP3	45BC03JPP3	45BC03JPP3
284T(S)-286T(S)				RG(S)	RGK(K)	RGZ(Z)	45BC02JPP3	45BC02JPP3	55BC02JPP3
324U(S)-326U(S)	G(S)	GK(K)					55BC03JPP3	55BC03JPP3	55BC03JPP3
324U(S)-326U(S)			GZ(Z)				45BC03JPP3	55BC03JPP3	55BC03JPP3
324T(S)-326T(S)				RG(S)	RGK(K)	RGZ(Z)	55BC02JPP3	55BC02JPP3	65BC02JPP3
364U(S)-365U(S)	G(S)		GZ(Z)				65BC03JPP3	65BC03JPP3	65BC03JPP3
364T(S)-365T(S)				RG(S)		RGZ(Z)	65BC03JPP3	65BC03JPP3	65BC03JPP3
404U(S)-405U(S)	G(S)		GZ(Z)				65BC03JPP3	65BC03JPP3	75BC03JPP3
404T(S)-405T(S)				RG(S)		RGZ(Z)	65BC03JPP3	65BC03JPP3	80BC03JPP3
444U(S)-445U(S)	G(S)		GZ(Z)				65BC03JPP3	65BC03JPP3	90BC03JPP3
444T(S)-445T(S)				RG(S)		RGZ(Z)	65BC03JPP3	65BC03JPP3	90BC03JPP3

* Open dripproof: Types G, GS, RG, RGS
Totally-enclosed, non-ventilated: Types GK, RGK
Totally-enclosed, fan-cooled: Types GZ, RGZ
Explosion-proof: Types GKK, GZZ, RGKK, RGZZ

BEARING INFORMATION—CONTINUED

SQUIRREL CAGE INDUCTION MOTORS–ABOVE NEMA SIZES

Frame size	Type of motor*						Front bearing	Rear bearing	
	G GS	GZ GZZ	RG RGS	AZ AZZ	Special	Speed (rpm)		Direct connected	Belted
503US-507US	G(S)	GZ(Z)				ALL	75BC03J3	75BC03J3	
503U-507U	G(S)	GZ(Z)			150 hp	1800	95BC03J3		110BL02J0
503U-507U	G(S)	GZ(Z)			200 hp	1800	95BC03J3		110RN02K0
503U-507U	G(S)					1200 & slower	95BC03J3		110SD22K0
503U-507U		GZ(Z)				1200 & slower	95BC03J3		110RN02K0
503U-507U	G(S)	GZ(Z)			Spec.	1200 & slower	95BC03J3		130RU02K0
584-588	G(S)					3600	75BC03J3	75BC03J3	
584-5-6	G(S)					1800	75BC03J3	75BC03J3	
587-8	G(S)					1800	75BC03J3	95BC03J3	
584-588	G(S)					1200 & slower	75BC03J3	95BC03J3	
584-588	G(S)					1200 & slower	95BC03J3		110RN02K0
580US All			RG(S)			3600	75BC03J3	75BC03J3	
580US All			RG(S)			1800 & slower	110BC02J3	110BC02J3	
580U All			RG(S)			1200	110BC02J3		130RU02K0
580U All			RG(S)			900 & slower	110BC02J3		130SD22K0
23				AZ		3600-1800	75BC03J3	75BC03J3	
23				AZ		1200 & slower	75BC03J3	95BC03J3	
23				AZ		1800 & slower	75BC03J3		95BL03J0
26	G(S)					3600	75BC03J3	75BC03J3	
26	G(S)					1800 & slower	75BC03J3	95BC03J3	
26	G(S)					1200 & slower	95BC03J3		130RU02K0
26				AZ		3600	75BC03J3	75BC03J3	
26				AZ		1800-1200	80BC03J3	80BC03J3	
26				AZ		1200 & slower	80BC03J3		110RN02K0
26				AZ	Spec.	1200 & slower	80BC03J3		130RU02K0
30	G(S)					1800 & slower	110BC02J3	110BC02J3	
30	G(S)					1200-900	110BC02J3		130RU02K0
30	G(S)					720 & slower	110BC02J3		140SD22K0
30				AZ		1800	95BC03J3	95BC03J3	
30				AZ		1200-900	110BC02J3	110BC02J3	130RU02K0
30				AZ		720 & slower	110BC02J3	130BC02J3	130RU02K0

* Open dripproof types G, GS, RG, RGS
Totally-enclosed, fan-cooled types GZ, AZ
Explosion-proof types GZZ, AZZ

EASA Technical Manual © 1996-2012, Electrical Apparatus Service Association, Inc.

BEARING INFORMATION—CONTINUED

SQUIRREL CAGE INDUCTION MOTORS

Frame size	Type of motor*								Speed (rpm)	Front bearing	Rear bearing	
	G §	GK GKK	GZ GZZ	AP APWW	APK APKK	APZ APZZ	AW AWW	AZ AZZ			Direct connected	Belted
182-184	G	GK(K)	GZ(Z)						All	206S	206S	206S
203-204				AP(WW)	APK(K)	APZ(Z)			All	305S	305S	305S
213-215	G	GK(K)							All	307S	307S	307S
213-215			GZ(Z)						All	306S	307S	307S
224-225				AP(WW)	APK(K)	APZ(Z)			All	306S	306S	306S
254				AP(WW)	APK(K)	APZ(Z)			All	307S	307S	307S
254U-256U	G	GK(K)							All	308S	308S	308S
254U-256U			GZ(Z)						All	307S	308S	308S
284				AP(WW)	APK(K)	APZ(Z)			All	308S	308S	308S
284U-286U	G	GK(K)							All	309S	309S	309S
284U-286U			GZ(Z)						All	308S	309S	309S
324-326*				AP(WW)	APK(K)	APZ(Z)			All	309S	309S	309S
324U-326U*	G	GK(K)							All	311S	311S	311S
324U-326U*			GZ(Z)						All	309S	311S	311S
364U-365U	G		GZ(Z)						All	313S	313S	313S
404U-405U	G		GZ(Z)						All	313S	313S	315S
444U-445U	G		GZ(Z)						All	313S	313S	318S
364-365*				AP(WW)	APK(K)	APZ(Z)			All	311S	311S	311S
404-405*				AP(WW)	APK(K)	APZ(Z)			All	312S	312S	312S
444-445*				AP(WW)	APK(K)	APZ(Z)			All	313S	313S	313S
504S-505S					APK(K)	APZ(Z)	AW(W)		3600	313S	313S	
504S-505S							AW(W)		1800	316S	316S	316R
504S-505S					APK(K)	APZ(Z)			1800-1200	316S	316S	316R
504U-505							AW(W)		1200 and slower	316S	316R	316R
504U-505					APK(K)	APZ(Z)			900 and slower	316S	316S	316S
580 All	G								3600	315S	315S	
584-5-6	G								1800	315S	315S	
587-8	G								1800	315S	319S	
580 All	G								1200 and slower	315S	319S	
580 All	G								1200 and slower	319S		NU222
23							AW(W)	AZ(Z)	3600-1800	315S	315S	
23							AW(W)		1200 and slower	315S	319S	319M
23								AZ(Z)	1200 and slower	315S	319M	319M
26	G								3600	315S	315S	
26	G								1800 and slower	315S	319S	
26	G								1200 and slower	319S		NU226
26							AW(W)	AZ(Z)	3600	315S	315S	
26							AW(W)		1800-1200	319S	319S	
26								AZ(Z)	1800-1200	316S	316S	
26							AW(W)		900 and slower	319S	222S	NU222
26								AZ(Z)	900 and slower	316S	222S	NU222
30	G								1800 and slower	222S	222S	
30	G								900	222S		NU226
30	G								720 and slower	222S		(SKF)22228
30							AW(W)		1800	319S	222S	
30								AZ(Z)	1800	319S	319S	
30							AW(W)		1200	319S	222S	
30								AZ(Z)	1200	222S	222S	
30							AW(W)		900	319S	222S	NU226
30								AZ(Z)	900	222S	222S	NU226
30							AW(W)		720 and slower	319S	226S	NU226
30								AZ(Z)	720 and slower	222S	226S	NU226

† Open dripproof: Types G, GS, GSS, AP, AW.
Splash-proof: Types APWW, AWW.
Totally-enclosed non-ventilated: Types GK, APK.
Totally-enclosed, fan-cooled: Types GZ, APZ, AZ.
Explosion-proof: Types GKK, GZZ, APKK, APZZ, AZZ.

§ Applies also to Types GS, GSS.
* Also applies: 324S-326S; 364S-365S; 404S-405S; 444S-445S.
NEMA frames 505 and smaller use double-shielded bearings.

BEARING INFORMATION—CONTINUED

DIRECT CURRENT MOTORS - TYPE E AND EB

Frame size	Front bearing	Rear bearing
30	S3604	S3604
50, 51	S3605	S3606
65, 71	S3606	S3607
75	S3607	S3608
80	S3608	S3609
90	S3609	S3610
100	S3610	S3612
120, 121, 122	6312	6314
123, 127S, 127	6312	6314
128S, 128	6312	6314
145, 146, 147S	6315	6318
147, 148, 149	6315	6318
160	6318	6320

DIRECT CURRENT MOTORS (RERATE) - TYPES EN, ENK AND ENZ

Frame size	Front bearing	Rear bearing
215A	305S	307S
216A	305S	307S
218A	305S	307S
254A	306S	308S
256A	306S	308S
284A	308S	309S
286A	308S	309S
324A	309S	311S
326A	309S	311S
365A	211S	313S
366A	211S	313S

MRC (Marlin-Rockwell Corp.) nomenclature used.

STANDARD ROLLING BEARINGS FOR SYNCHRONOUS GENERATORS

Frame size	Front bearing	Rear bearing
GBB-20	6314	6315
GBB-26	6315	6315
BB-16	6211	6211
BB-19	6213	6213
BB-23	6213	6216

Single bearing generators use only the front bearing.
Equivalent bearings of other manufacturers may be substituted.

EASA Technical Manual © 1996-2012, Electrical Apparatus Service Association, Inc.

ARCO ELECTRIC PRODUCTS CORP.

DATE CODE INFORMATION

The first two digits of serial number denotes the year of manufacture. The third and fourth digits denote the month. For example, 9207421 was manufactured in July, 1992.

Type or catalog number:

T - Single-phase open dripproof
FT - Single-phase TEFC
OF - Single phase or three phase 1200 rpm high slip 5 to 8%
TE - Three-phase TEFC
PM - Three-phase ODP

The model number tells whether the motor is single phase or three phase, the poles or speed of the motor, the horsepower of the motor. Three letters tell what type of bearings the motor has, its recommended mounting position, and the type of frame. The one- or two-digit number after the dash is a specification number.

Example: Model Number 1, 4, 500, B, H. V, -1

1 = Single phase
4 = Four pole or 1800 rpm
500 = 5 horsepower
B = Ball bearing
H = Horizontal mount
V = Vented or ODP
1 = Specification number

BEARING INFORMATION

Frame size	Bearing shaft end	Bearing front end
56	6203Z	6203Z
143-145	6205Z	6203Z
182-184	6206Z	6205Z
213-215	6308Z	6206Z
254-256	6309Z	6206Z

ASEA

(Now ABB Industrial Systems)

BEARING INFORMATION

TYPE MT AND MTR

Frame	Poles	Drive bearing	Non-drive bearing
63	All	6202C3	6202C3
71	All	6203C3	6202C3
80	All	6204C3	6203C3
90	All	6305C3	6204C3
100	All	6306C3	6205C3

TYPE MBT AND MBTR (112-250)

Frame	Poles	Drive bearing	Non-drive bearing
71	All	6203Z	6203Z
80	All	6204Z	6204Z
90	All	6205Z	6205Z
100	All	6306Z	6306Z
112	All	6206ZC3 (6306Z)	6205ZC3 (6306Z)
132	All	6208ZC3 (6308Z)	6206ZC3 (6308Z)
160	All	6209ZC3 (NU209ECP)	6209ZC3 (7209B)
180	All	6211ZC3 (NU211ECP)	6210ZC3 (7210B)
200	All	6213ZC3 (NU213ECP)	6211ZC3 (7211B)
225	All	6214C3 (NU214ECP)	6214C3 (7214B)
250	All	6214C3 (NU214ECP)	6214C3 (7214B)

TYPE MBTF

Frame	Poles	Drive bearing	Non-drive bearing
71	All	6203Z	6203Z
80	All	6204Z	6204Z
90	All	6205Z	6205Z
100	All	6206Z	6206Z
112	All	6206Z	6206Z
132	All	6208Z	6208Z

EASA Technical Manual © 1996-2012, Electrical Apparatus Service Association, Inc.

BEARING INFORMATION—CONTINUED

TYPE MBN

Frame	Poles	Drive bearing	Non-drive bearing
71	All	6203Z	6202Z
80	All	6204Z	6203Z
90	All	6305Z	6204Z
100	All	6306Z	6205Z
112	All	6306Z	6205Z
132	All	6308Z	6206Z
160	All	6309	6307
180	All	6310	6309
200	All	6312	6310
225 (Foot Mtd)	All	N313	6312
225 (Flange Mtd)	All	6313	6312

TYPE MHF

Frame	Poles	Drive bearing	Non-drive bearing
160	All	6309	6209Z

TYPE MBG

Frame	Poles	Drive bearing	Non-drive bearing
160	2	6310C3	6307
160	4-10	6310	6307
180	2	6312C3	6309
180	4-10	6312	6309
200	2	6313C3	6310
200	4-10	6313	6310
225	2	6314C3	6312
225	4-10	6314	6312

TYPE MBV AND MAV

Frame	Poles	Drive bearing	Non-drive bearing
280	2	6218C4 (NU218ECP)	6218C4
280 (Foot Mtd)	4 - 8	NU218ECP (6218C3)	6218C3 (7218B)
280 (Flange Mtd)	4 - 8	6218C3 (NU218ECP)	6218C3 (7218B)

BEARING INFORMATION—CONTINUED

TYPE MBM

Frame	Poles	Drive bearing		Non-drive bearing
		Foot mounted	Flange mounted	
250	2	6314	6314	6312
250	4 - 8	N314	6314	6312
280	2	6316	6316	6314
280	4 - 8	N316	6316	6314
315	2	6318C4	6318C4	6316C4 (7316B)
315	4 - 8	N318 (6318C3)	6318C3 (N318)	6316C3 (7316B)
355	2	63218C4	6318C4	6318C4
355	4 - 8	N322 (6322C3)	6322C3 (N322)	6318C3 (7318B)

TYPE MAM

Frame	Poles	Drive bearing		Non-drive bearing
		Foot mounted	Flange mounted	
315	4 - 8	N318 (6318C3)	6318C3 (N318)	6318C3 (7318B)
355	4 - 8	N322 (6322C3)	6322C3 (N322)	6322C3 (7322B)

EASA Technical Manual © 1996-2012, Electrical Apparatus Service Association, Inc.

BALDOR ELECTRIC CO.

DATE CODE INFORMATION

- **AC motors:** Serial number shows month and year of manufacture. Preceding letter indicates plant of manufacturer. For example, F292 was manufactured in February, 1992.
- **DC motors:** Internal production number precedes date code. For example, 17394-0393-xxxx was manufactured in March, 1993.
- **Subfractional and gear motors:** Data code is month, day and year. Month is a letter: A-January, B-February, C-March, etc. For example, A2692-xxx was manufactured in January 26. 1992.
- **Servo motors and Series 15 inverters and servo controls:** Year and month. For example, 925-xxx was manufactured in May, 1992.
- **Larger inverters and vector controls:** First digit for year, second and third for month. For example, 303xxx was manufactured in March, 1993.
- **BC Series—SCR controls:** Data code is two digits for month, one digit for year, following two digits for production information. For example, xx033 was manufactured in March, 1993.

BALDOR FRAME/STACK SIZES

There is a relationship between the stack size, hp, and the NEMA frame size.

Baldor Stack Steel Band	NEMA Frame
33	42
34	48, 56, 143T, or 145T
35	56, 143T 145T 182T, or 184T
36	182U/T, 184U/T, 213T, or 215T
37	213U/T, 215U/T, or 254T in 213 Band
39	254T or 256T
40	284T or 286T
42	324T or 326T
Cast Iron, TE	
305	143T or 145T
306	182T or 184T
307	213T, 215T, or 254T
309	254T or 256T
310	284T or 286T
312	324T or 326T
314	364T or 365T
316	404T or 405T
318	444T, 445T, 447T, or 449T

Type Number: First digit indicates frame size.
For example:
3 = 33 band size or 42 frame (NEMA)
7 = 37 band size or 213/15 frame (NEMA)
07 = 307 band size or 213/15 C.I. frame

Note: The last digits of type, etc.
Number represents the number of 1/8" increments—e.g., 528L says 10 lamination (L) in 35 frame (56 or 140) with (28) 1/8" increments or 3-1/2" lamination stack.

VOLTAGE/POWER SERVICE

Voltage Code

A	115/208-230 volts, 60 Hz
B	115/230 volts, 60 Hz
C	230 volts, 60 Hz
D	208-230 volts, 60 Hz
E	208-230/460 volts, 60 Hz
F	230/460 Votls, 60 Hz
G	460 volts, 60 Hz
H	575 volts, 60 Hz
I	200 volts, 60 Hz
J	110/220 volts, 50 Hz
K	220/380/440 volts, 50 Hz
L	115 volts, ;60 Hz
M	220 volts, 50 Hz
N	380/460 volts, 50/60 Hz
O	2300/4160 volts, 60 Hz
P	2300 volts, 60 Hz

DATE CODE INFORMATION—CONTINUED

ABBREVIATIONS

The basic Baldor catalog number consists of a letter(s) and four non-significant numbers. A suffix letter(s) and/or number may also be part of the catalog number. For example, L3510 or L3510T. Following is a list of prefix and suffix letters.

Catalog number prefix

AF	Aeration fan motor
AO	Air over motor
AS	Arbor saw motor
B	Brake motor
BC	DC motor speed control
BTG	Tachometer generator
C	NEMA C-face with rigid base
CD	Wound Field DC motor, NEMA C-face with base
CDB	Brushless DC motor
CDP	PM SCR drive motor
CF	Condensor fan motor
CH	Direct drive fan motor with resilient base
CP	Chemical processing, corrosion protected motor
D	DC shunt or compound motor
DE	Vacuum pump motor
DG	Gate operator motor
DMG	Lifting magnet generator
DOC	Door operator motor
E	Super-E premium efficiency motor
ECP	Super E premium efficiency chemical processing corrosion protected motor
EM	High efficiency
F	F-2 mount motor
FD	Farm duty motor
G	Subfractional hp gear motor
GC	Permanent split capacitor right angle shaft gear motor
GCP	Permanent split capacitor parallel shaft gear motor
GD	Centrifugal fan motor
GP	Subfractional hp PM motor
GPP	PM parallel shaft gear motor
GS	Grain stirring motor
IDM	Inverter drive motor-TEFC
IDNM	Inverter drive motor-TENV
IM	Irrigation drive motor
IR	Instant reversing single phase farm motor
JM	NEMA JM pump shaft & face with rigid base
JP	NEMA JP pump shaft & face with rigid base
K	Model 34 diameter motor with 56 C-face, less base
KN	Model 34 diameter TENV motor with 56 C-face, less base
M	Three phase
MM	Metric dimension motor with rigid base
MPM	Three phase metering pump motor
MVM	Metric dimension motor, Flange mount less base
OF	Design D, high slip motor (oil field)
P	Pressure washer motor
PSC	Permanent split capacitor
R	Repulsion-start Induction-run motor
RL&RM	Resilient base (cradle mount)
S	Single phase soft start
SWD	Stainless washdown duty motor
UC	Universal crop dryer motor
V	NEMA C-face round body, less base
VJM	NEMA JM pump shaft and face, less base
VLCP	P base vertical pump motor, medium thrust
VP	PM SCR drive motor with metric face or flange
VPCP	P base vertical pump motor, high thrust
WD	Washdown duty motor
WW	Woodworking motor
ZDM	Vector drive motor-TEFC
ZDNM	Vector drive motor-TENV

Catalog number suffix

-2	120/240V field
-4	460 volt winding
-5	575 volt winding
-8	200 Volt Winding
-9	NEMA Design C high torque winding
-23	2300 volt winding
-50	Wound for 50 hertz service
-2341	2300/4160 volt winding
-F	230/460 volts, 60 Hz
-1	Explosion-proof, 1.15 service factor
-L	115 volts, 60 Hz
/35	Full 140 frame band diameter
/36	Full 180 frame band diameter

Grinder catalog number suffix

B	Two speed
D	Deluxe
DP	Deluxe with edge tool attachment
E	Exhaust guards
W	Wide design

Other abbreviations

C	Permanent split capacitor
L	Capacitor-start, Induction-Run motor
LC	Capacitor-start, capacitor-Run motor
S	Split phase
X	Explosion-proof

EASA Technical Manual © 1996-2012, Electrical Apparatus Service Association, Inc.

BEARING INFORMATION

Baldor model	NEMA frame	Mounting	Standard bearing				Special drive end bearing available	
			E.P. mat'l	ODE-type	E.P. mat'l	DE-type	Open mtr	Encl. mtr.
33	42	HORIZ.	AL		AL			
	42C	FACE	AL	203-C03	AL	203-C03		
	42	RESIL.	C.I.		C.I.			
34	48 & 56	HORIZ.	AL		AL			
	48C & 56C	FACE	AL	203-C03	AL	203-C03	205	205
	143T & 143TC	FACE	AL		AL			
	48 & 56	RESIL	AL		AL			
35 & 305 (*)	56, 66 & 143-5T	HORIZ.	AL		AL	205-C03	206	206
	56C, 68C & 143-5TC	FACE	AL	203-C03	AL	205-C03	206 & 207	206 & 207
	56	RESIL.	AL		AL Open, C.I. Encl	203-C03	205	104
36 & 306 (*)	182-184 & 182-184T	HORIZ.	AL		AL			208
	182-184C		AL	205-C03	C.I.	206-C03	207	207
	182-184TC	FACE	AL		AL			207
	182-184LP		C.I.	206-B03	C.I.	QJ307-A01		
37 & 307 (*)	213-215 & 213-215T	HORIZ	AL		AL			206 & 309
	213-215C		AL	206-C03	AL	307-C03	309	309
	213-215TC	FACE	AL		AL			309
	213-215LP		C.I.	307-B03	C.I.	QJ211-A01		
39	254-256U & 254-256T	HORIZ	AL	208-B03	AL	309-B03		
	254-256UC & 254-256TC	FACE	AL	208-B03	C.I.	309-B03	312	
309	254-256U & 254-256T	HORIZ	C.I.	208 OPEN-B03	C.I.	309 OPEN - B03	211	211 & 312
	254-256UC & 254-256TC	FACE	C.I.	208 ENCL A01	C.I.	309 ENCL A01	211	211 & 312
	254-256LP	FACE	C.I.	208-B03	C.I.	QJ213-A01		
310	284-286U & 284-286T	HORIZ	C.I.	309-A01	C.I.	310 OPEN - A01		
	284-286UC & 284-286TC	FACE	C.I.	309-A01	C.I.	311 ENCL. - A01		
	284-286LP	FACE	C.I.	309-B03	C.I.	QJ213-A01		
40	284-286U & 284-286T	HORIZ	C.I.	309-B03	C.I.	311-B03		
	284-286UC & 284-286TC	FACE	C.I.	309-B03	C.I.	311-B03		
312	324-326U & 324-326T	HORIZ	C.I.	311-A01	C.I.	311 OPEN-A01	312	
	324-326UC & 324-326TC		C.I.	311-A01	C.I.	312 ENCL-A01	312	
	324LP (2 POLE)		C.I.	311-B03	C.I.	OJ312-A01		
	324LP (4 POLE)	FACE	C.I.		C.I.	QJ312-A01		
	326VP (2 POLE)		C.I.	311-B03	C.I.	QJ311/7311-A01		
	326VP (4 POLE)		C.I.		C.I.	QJ312/7312-A01		
42	324-326U & 324-326T	HORIZ	C.I.	311-B03	C.I.	312-B03		
	324-326UC & 324-326TC	FACE	C.I.	311-B03	C.I.	312-B03		
314	364-365U & 364-365T	HORIZ	C.I.		C.I.	313-A01		
	364-365UC & 364-365TC		C.I.	312-A01	C.I.	313-A01		
	364-365VP (2 POLE)	FACE	C.I.	312B03	C.I.	QJ311/7311-A01		
	364-365VP (4 POLE)		C.I.		C.I.	QJ314/7314-A01		
316	404-405U & 404-405T	HORIZ	C.I.		C.I.	316 OPEN-A01		
	404-405TC	FACE	C.I.	315 OPEN-A01	C.I.	316 ENCL-A01		
	404-405TS (2 POLE)	HORIZ	C.I.	313 ENCL-A01	C.I.	316 OPEN-A01		
			C.I.		C.I.	313 ENCL-A01		
318			C.I.		C.I.	319 OPEN-C03		
	444-445U & 444-445T		C.I.	313 OPEN-C03	C.I.	319 ENCL-A01		
	444-445TS (2 POLE)		C.I.	313 ENCL-A01	C.I.	313 OPEN-A01		
		HORIZ	C.I.		C.I.	313 ENCL		
	447-449T		C.I.	314 ENCL-A01	C.I.	319 ENCL-A01		NU319
	447-449TS (2 POLE)		C.I.	314 ENCL-A01	C.I.	314 ENCL-A01		NU320, NU321
N5005-5011	5005-5011S (2 POLE)		C.I.	314-A01	C.I.	314-A01		
	5005-5011L (4 POLE)	HORIZ	C.I.	222-A01	C.I.	322-A01		NU322
	5005-5011L (6 POLE)		C.I.	222-A01	C.I.	324-A01		NU324

NOTE: DE = Drive end, ODE = Opposite drive end, ENCL & OPEN = Motor enclosure.
NU = Indicates roller bearings used in Charlotte produced products.
Bearing Type: A01 = Open; B03 = Single shield; C03 = Double shield.
(*) Have cast iron end plates.

AL = Aluminum
C.I. = Cast iron

BEARING INFORMATION—CONTINUED

Bearing number	Bearing bore	Bearing number	Bearing bore	Bearing number	Bearing bore
03	.6693	10	1.9685	18	3.5433
04	.7874	11	2.1654	19	3.7402
05	.9843	12	2.3622	20	3.9370
06	1.1811	13	2.5591	21	4.1339
07	1.3780	14	2.7559	22	4.3307
08	1.5748	15	2.9528	24	4.7244
09	1.7717	16	3.1496		

EASA Technical Manual © 1996-2012, Electrical Apparatus Service Association, Inc.

BAUMULLER NURNBERG

(U.S. Agent: Electric Motor Corp.)

BEARING INFORMATION

DC MOTORS

Frame	Drive bearing ball	Drive bearing roller	Non-drive bearing
100	63062RSRC3	NU306E	63062RSRC3
112	63072RSRC3	NU307E	62062RSRC3
132	62082RSRC3	NU208E	62062RSRC3
160	6210C3	NU2210E	62082RSRC3
180	6212C3	NU2212E	62102RSRC3
200	6313C3	NU313E	63102RSRC3
225	6314C3	NU314E	62132RSRC3
250	6316C3	NU316E	63132RSRC3
280	6317C3	NU317E	6316C3

BHARAT BIJEE, LTD.

BEARING INFORMATION

DEEP GROOVE BALL BEARING NO. EQUIVALENT TO SKF

Frame size	Driving end	Non-driving end
63	6201	6201
71	6202	6202
80	6004	6004
90S & 90L	6205	6205
100L	6206	6206
112M	6306	6306
132S & 132M	6308	6308
160M & 160L	6309	6309
B-56/54	6203	6203
1LC2 015/16	6201	6201
1LC2 025/26	6202	6203
1LC2 035/36	6004	6204
1LC2 044/46	6205	6305
1LC2 053/54	6206	6307
1LC2 066	6306	6308
1LC2 072/78	6308	6308
W18	6202	6202
Pn66	6206	6206
50 SLM	6309	6307
1MJ90	6205	6205
1MJ130	6308	6308
16FP & 16LFP	6309	6309
MJ180	6310	6310
20LFP	6312	6312
60FP	6312	6312
MJ280	6316	6316

EASA Technical Manual © 1996-2012, Electrical Apparatus Service Association, Inc.

BROOK HANSEN; BROOK HANSEN (CANADA), INC.

(Now Brook Crompton N.A.)

NUMBERING SEQUENCE

1 2 3 4 5 6 7 XX — 8 9

PRIMARY IDENTIFICATION—DETAILS

1 & 2	Factory and product coding
3	Enclosure
4	Voltage
5	Speed
6 & 7	hp/kW rating
XX	Motor type/construction
8 & 9	Mounting

ENCLOSURE (3)

Code	Definition
1	Dripproof
2	Totally-enclosed, fan-cooled
3	Explosion-proof
4	Totally-enclosed, non-ventilated
5	Totally-enclosed air over
6	VHS WP1 enclosure
7	Ex N or EEx e motors
8	EEx d motors

MOTOR TYPE/ CONSTRUCTION (XX)

Code	Definition
C	Cast iron
PE	Premium efficient
WA	W-series aluminum
WC	W-series cast iron
S	Steel frame

BEARING INFORMATION

BEARING REFERENCES AND OIL SEALS

IEC frame*	NEMA frame	Polarity	Drive end	Non-drive end	Alternate drive end roller bearing
63	—	All	6202ZZ	6202ZZ	—
71	—	All	6003ZZ	6003ZZ	—
80	56	All	6204ZZ	6202ZZ	—
90	143/5	All	6205ZZ	6203ZZ	—
100	—	All	6206ZZ	6205ZZ	—
112	182/4	All	6206ZZ	6205ZZ	—
132	213/5	All	6208ZZ	6305ZZ	—
160	254/6	All	6309ZZ	6307ZZ	—
180	284/6	All	6310ZZ	6308ZZ	—
200	324	All	6313	6313	N313
225S	326	All	6313	6313	N313
225M	364	All	6314	6314	N314
250S	365	2	6314	6314	N314
250S	365	4 & higher	6316	6316	N316
250M	404	2	6314	6314	N314
250M	404	4 & higher	6318	6318	N318
280S	405	2	6314	6314	N314
280S	405	4 & higher	6318	6318	N318
280M	444	2	6316	6316	N316
280M	444	4 & higher	6319	6319	N319
315S/M/L	445/504/5	2	6316	6316	N316
315S/M/L	445/504/5	4 & higher	6319	6319	N319

* 200 through 315L references apply to W series only. Call for Steel References.

BEARING INFORMATION—CONTINUED

NEMA RERATE DRIPPROOF 182-585 (ALSO 182-405 CZ MOTORS)

Frame size	Shaft ext. bearing	Bearing number	Bearing type	Front bearing	Bearing number	Bearing type
182—184	30mm	306	Medium	25mm	305	Medium
213—215	35mm	307	Medium	25mm	305	Medium
254U—256U	45mm	309	Medium	35mm	307	Medium
284U—286U	50mm	310	Medium	40mm	308	Medium
324U—326U	55mm	311	Medium	45mm	309	Medium
364U—365U	55mm	311	Medium	50mm	310	Medium
364US—365US	55mm	311	Medium	50mm	310	Medium
404U—405U	65mm	313	Medium	55mm	311	Medium
404US—405US	65mm	313	Medium	55mm	311	Medium
444U—445U	75mm	315	Medium	65mm	313	Medium
*444US—445US	65mm	313	Medium	65mm	313	Medium
504—505U	90mm	318	Medium	80mm	316	Medium
*504S—505US	65mm	313	Medium	65mm	313	Medium
584—585	105mm	321	Medium	90mm	318	Medium

*2 pole only

NEMA RERATE TEFC MK. I

Frame size	Shaft ext. bearing	Bearing number	Bearing type	Front bearing	Bearing number	Bearing type
182—184	25mm	305	Medium	25mm	305	Medium
213—215	30mm	306	Medium	25mm	305	Medium
254U—256U	35mm	307	Medium	30mm	306	Medium
284U—286U	45mm	309	Medium	35mm	307	Medium
324U—326U	50mm	310	Medium	40mm	308	Medium

NEMA RERATE TEFC MK. II

Frame size	Shaft ext. bearing	Bearing number	Bearing type	Front bearing	Bearing number	Bearing type
182—184	30mm	306	Medium	25mm	305	Medium
213—215	35mm	307	Medium	25mm	305	Medium
254U—256U	45mm	309	Medium	35mm	307	Medium
284U—286U	50mm	310	Medium	40mm	308	Medium
324U—326U	55mm	311	Medium	45mm	309	Medium
364U—365U	55mm	311	Medium	50mm	310	Medium
364US—365US	55mm	311	Medium	50mm	310	Medium
404U—405U	65mm	313	Medium	55mm	311	Medium
404US—405US	65mm	313	Medium	55mm	311	Medium
444U—445U	75mm	315	Medium	65mm	313	Medium
*444US—445US	65mm	313	Medium	65mm	313	Medium
504—505U	90mm	318	Medium	80mm	316	Medium
*504S—505US	65mm	313	Medium	65mm	313	Medium

*2 pole only

EASA Technical Manual © 1996-2012, Electrical Apparatus Service Association, Inc.

BEARING INFORMATION—CONTINUED

OLD NEMA 203-254 (MK. V) OLD NEMA 284-326 (MK. V/VII)

Frame size	Shaft ext. bearing	Bearing number	Bearing type	Front bearing	Bearing number	Bearing type
203—204	25mm	305	Medium	20mm	304	Medium
224—225	30mm	306	Medium	25mm	305	Medium
254	35mm	307	Medium	30mm	306	Medium
284	50mm	310	Medium	40mm	308	Medium
324/6	55mm	311	Medium	45mm	309	Medlum

OLD NEMA(MK. VI/I)

Frame size	Shaft ext. bearing	Bearing number	Bearing type	Front bearing	Bearing number	Bearing type
364—365	55mm	311	Medium	50mm	310	Medium
404—405	65mm	313	Medium	50mm	310	Medium
444—445	65mm	313	Medium	55mm	311	Medium
504—505	80mm	316	Medium	80mm	316	Medium

OLD NEMA CZ

Frame size	Shaft ext. bearing	Bearing number	Bearing type	Front bearing	Bearing number	Bearing type
203—204	30mm	206	Light	20mm	304	Medium*
224—225	30mm	306	Medium	25mm	305	Medium*
254	35mm	307	Medium	30mm	306	Medium*
284	45mm	309	Medium	45mm	309	Medlum
324—326	50mm	310	Medium	50mm	310	Medium
364—365	55mm	311	Medium	55mm	311	Medium
404—405	65mm	313	Medium	65mm	313	Medium

*Mark V endbells

OLD NEMA TEFC

Frame size	Shaft ext. bearing	Bearing number	Bearing type	Front bearing	Bearing number	Bearing type
TC203—204	30mm	306	Medium	20mm	304	Medium
TC224—225	30mm	306	Medium	25mm	305	Medium
TC254	35mm	307	Medium	30mm	306	Medium
TC284	45mm	309	Medium	35mm	307	Medium
TC324—326	50mm	310	Medium	40mm	308	Medium
TC364—365	55mm	311	Medium	50mm	310	Medium
TC404—405	65mm	313	Medium	55mm	311	Medium

BEARING INFORMATION—CONTINUED

BRITISH FRAMES

Frame size	Ball bearing	Ball bearing number	Roller bearing	Roller bearing number	Type
R22—23	3 in	LS19	3 in	RLS19	Light
TC22—23	3 in	LS19	3 in	RLS19	Light
R24—25	3 1/2 in	LS20	3 1/2 in	RLS20	Light
TC24—25	3 1/2 in	LS20	3 1/2 in	RLS20	Light
R26—27	4 in	LS21	4 in	RLS21	Light
TC26—27	4 in	LS21	4 in	RLS21	Light
R28—29	4 1/2 in	MS22	4 1/2 in	RMS22	Medium
TC28—29	4 1/2 in	MS22	4 1/2 in	RMS22	Medium
R30—31	5 in	MS23	5 in	RMS23	Medium
TC30—31	5 in	MS23	5 in	RMS23	Medium
R32—33	5 1/2 in	MS231/2	5 1/2 in	RMS231/2	Medium
TC32—33	5 1/2 in	MS231/2	5 1/2 in	RMS231/2	Medium

BRROK MOTORS (AUSTRALIA) TYPE D

Frame	Poles	Drive bearing	Non-drive bearing
D80	All	LJ20DD	LJ15DD
D90	All	LJ25DD	LJ17DD
D100	All	LJ30D	LJ25
D112	All	MJ30D	MJ25
D132	All	MJ40D	MJ25
D160	All	MJ45D	MJ35
D180	All	MJ50	MJ40
D200	2	360V3	MJ45
D200	4 & UP	MJ60	MJ45
D225	2	365V3	MJ50
D225	4 & UP	MJ65	MJ50
D250	2	365V3	355V3
D250	4 & UP	MJ75	MJ55
D280	2	370V3	370V3
D280	4 & UP	MJ85	MJ70
D315	2	370V3	370V3
D315	4 & UP	390V3	MJ70

Suffix D: single shield bearing - inboard side
Suffix DD: double shield bearing
Prefix 3 (365V3): medium bearing

EASA Technical Manual © 1996-2012, Electrical Apparatus Service Association, Inc.

BEARING INFORMATION—CONTINUED

BROOK CROMPTON PARKINSON
CAST IRON FABRICATED STEEL FRAMES
VERTICAL MOUNTING

Frame	Poles	Drive bearing	Non-drive bearing
D80	All	6204ZZ	6202ZZ
D90	All	6205ZZ	6203ZZ
D100	All	6206Z	6205
D112	All	6207Z	6207
7-D112	All	6306LB	6205LB
7-D132	All	6308LB	6207LB
7-D160	All	6309LB	6208LB
7-D180	All	6310LB	6209LB
7-D200	All	6312LB	6210LB
C200	All	6213	6213
D/C225	All	6215	6215
D/C250	All	6217	6217
D280	2	N314	6314
D/C280 (Foot)	4 & Up	N318	6218
D/C280(Flange)	4 & Up	6318	6218
C280	2	N314	6314
D315	2	N314	6314
D/C315(Foot)	4 & Up	N319	6219
D/C315(Flange)	4 & Up	6319	6219
C315	2	N314	6314

BROOK CROMPTON PARKINSON (GREAT BRITIAN)
ALUMINUM FRAMES
ALL MOUNTINGS, ALL POLES

Frame	Drive bearing	Non-drive bearing
D63	6202ZZ	6202ZZ
D71	6202ZZ	6202ZZ
D80	6204ZZ	6202ZZ
D90	6205ZZ	6203ZZ
D100	6206Z	6205
D112	6306Z	6305
D132	6308Z	6305
C160	6310Z	6308
D160	6309Z	6307
C180	6312Z	6310
D180	6310Z	6308
C200	6313Z	6311
D200	6312Z	6309
C225	N314	6311

BEARING INFORMATION—CONTINUED

CAST IRON AND FABRICATED STEEL FRAMES
HORIZONTAL MOUNTING

Frame	Poles	Drive bearing	Non-drive bearing
D80	All	6204ZZ	6202ZZ
D90	All	6205ZZ	6203ZZ
D100	All	6206Z	6205
D112	All	6207Z	6207Z
7-D112	All	6306LB	6205LB
7-D132	All	6308LB	6207LB
7-D160	All	6309LB	6208LB
7-D180	All	6310LB	6209LB
7-D200	All	6312LB	6210LB
C200	All	N213	6213
D/C225	All	N215	6215
D/C250	All	N217	6217
D/C280	2	N218	6218
D/C280	4 & Up	N318	6218
D/C315	2	N219	6219
D/C315	4 & Up	N319	6219

HOLLOW RIB STEEL FRAMES
HORIZONTAL AND VERTICAL, FOOT MOUNTED

Frame	Poles	Drive bearing	Non-drive bearing
7-D225S	4 & Up	N215	6215
7-D225M	All	N215	6215
7-D250	All	N217	6217
7-D280	2	N314	6314
7-D280	4 & Up	N318	6314
7-D315	2	N314	6314
7-D315	4 & Up	N319	6314
7-D355	2	N316	6316
7-D355	4 & Up	N324	6316

HOLLOW RIB STEEL FRAMES
VERTICAL FLANGE MOUNT

Frame	Poles	Drive bearing	Non-drive bearing
7-D225S	4 & Up	6215	6215
7-D225M	All	6215	6215
7-D250	All	6217	6217
7-D280	2	N314	6314
7-D280	4 & Up	6318	6314
7-D315	2	N314	6314
7-D315	4 & Up	6319	6314
7-D355	2	N316	6316
7-D355	4 & Up	6324	6316

EASA Technical Manual © 1996-2012, Electrical Apparatus Service Association, Inc.

BROWN-BOVERI CORP.

(Now ABB Industrial Systems)

BEARING INFORMATION

SLIP-RING MOTORS, ENCLOSED HORIZONTAL AND VERTICAL

Frame	Poles	Drive bearing	Non-drive bearing
160	2 - 8	6309*	6309
180	2 - 8	6311*	6311
200	2 - 8	6312*	6312
225	2 - 8	6313*	6313
250	2 - 8	6314*	6314
280	2	6316MC3	6314
280	4 - 8	NU316C3	6314
315	2	6316MC3	6316MC3
315	4 - 8	NU318C3	6316C3
355...B (Horiz.)	2	6316MC3	NU316MC3
355...B (Horiz.)	4 - 8	NU320MC3	6318C3
355...B (Vert.)	2	NU316MC3	7316M
355...B (Vert.)	4 - 8	NU320MC3	6318C3**
355...C (Horiz.)	4 - 8	NU322MC3	6320C3
355...C (Vert.)	4 - 8	NU322MC3	Contact BBC
400 (Horiz.)	4 - 8	NU322MC3	6320C3
400 (Vert.)	4 - 8	NU322MC3	Contact BBC

* Can replace ball bearings with roller bearings.
** SU355L frame uses 7318M bearing.

BEARING INFORMATION—CONTINUED

SLIP-RING MOTORS, OPEN HORIZONTAL AND VERTICAL

Frame	Poles	Drive bearing	Non-drive bearing
160S	2 - 8	6308*	6308
160 M,L	2 - 8	6310*	6308
180	2 - 8	6311*	6310
200	2 - 8	6312*	6310
225	2 - 8	6314*	6312
250 (Horiz.)	2	6314	6314
250 (Vert.)	2	NU316MC3	6314
250	4 - 12	NU316C3	6314
280 (Horiz.)	2	6314	6316MC3
280 (Vert.)	2	NU316MC3	6316MC3
280	4 - 12	NU318C3	6316C3
315 (Horiz.)	2	6316MC3	NU316MC3
315 (Vert.)	2	NU316MC3	6316MC3
315	4 - 12	NU320MC3	6318C3
355 (Horiz.)	2	6316MC3	NU316MC3
355 (Vert.)	2	NU316MC3	7316M
355	4 - 12	NU322MC3	6320C3
400 (Horiz.)	2	6316MC3	NU316MC3
400 (Vert.)	2	NU316MC3	7316M
400	4 - 12	NU322MC3	6320C3
450	4 - 12	Contact BBC	Contact BBC

* Can replace ball bearings with roller bearings.

HAZARDOUS LOCATION HIGHER SAFETY MOTORS–HORIZONTAL AND VERTICAL

Frame	Poles	Drive bearing	Non-drive bearing
63	2 & 4	6202Z	6202Z
71	2 - 8	6202Z	6202Z
80	2 - 8	6204Z	6204Z
90	2 - 8	6205Z	6205Z
100	2 - 8	6206Z	6205Z
112	2 - 8	6306Z	6306Z
132	2 - 8	6308Z	6308Z
160	2 - 8	62092RSC3	62092RSC3
180	2 - 8	63102RSC3	63102RSC3
200	2 - 8	63122RSC3	63122RSC3
225	2 - 8	63132RSC3	63132RSC3
250	2 - 8	63142RSC3	63142RSC3
280	2 - 8	6217C3	6217C3
315	2 - 8	6219C3	6219C3

EASA Technical Manual © 1996-2012, Electrical Apparatus Service Association, Inc.

BEARING INFORMATION—CONTINUED

PRESSURE PROOF MOTORS–HORIZONTAL AND VERTICAL

Frame	Poles	Drive bearing	Non-drive bearing
63	2 & 4	62012ZRL12	62012ZRL12
71	2 & 4	62022ZRL12	62022ZRL12
80	2 - 6	62042ZRL12	62042ZRL12
90	2 - 6	62052ZRL12	62052ZRL12
100	2 - 8	62062ZRL12C3	62062ZRL12C3
112	2 - 8	62062ZRL12C3	62062ZRL12C3
132	2 - 8	62082ZRL12C3	62082ZRL12C3
160	2 - 8	62092ZRL12C3	62092ZRL12C3
180	2 - 8	62102ZRL12C3	62102ZRL12C3
200	2 - 8	62122ZRL12C3	62122ZRL12C3
225	2 - 8	63132ZRL12C3	63132ZRL12C3
250	2 - 8	63152ZRL12C3	63152ZRL12C3
280	2	63152ZRL12C3	63152ZRL12C3
280	4 - 8	63162ZRL12C3	63162ZRL12C3
315	2	63162ZRL12C4	63162ZRL12C4
315 (Horiz.)	4 - 8	63182ZRL12C3	6318C3
315 (Vert.)	4 - 8	63182ZRL12C3	3318C3
355	2	6318C4	6318C4
355 (Horiz.)	4	NU320C3	6320C4
355 (Vert.)	4	NU320C3	3320C4
355 (Horiz.)	6 & 8	NU320C3	6320C3
355 (Vert.)	6 & 8	NU320C3	3320C3

ENCLOSED MOTORS–NORMAL CONSTRUCTION

Frame	Poles	Drive bearing	Non-drive bearing
56	2 & 4	6201Z	6201Z
63	2 & 4	6202Z	6202Z
71	2 - 8	62032Z	62032Z
80	2 - 8	62042Z	62042Z
90	2 - 8	62052Z	62052Z
100	2 - 8	62062Z	62062Z
112	2 - 8	6306	6306Z
132	2 - 8	6308	6308Z
160 G	2 - 8	6209ZC3	6209ZC3
180 G	2 - 8	6210ZC3	6210C3
200 H	2 - 8	6212ZC3	6212C3
225 H	2 - 8	6213ZC3	6213C3
250 G	2 - 8	6314C3	6313C3
280 GR	2 - 8	6217C3	6217C3
315 GR, H	2 - 8	6219C3	6219C3
355 F	2	6316C3	6316C3
355 C	4 - 8	6320C3	6316C3
400 C (Horiz.)	2 - 8	6222C3	6319C3
400 C (Vert.)	2 - 8	6222C3	7319B

EASA Technical Manual © 1996-2012, Electrical Apparatus Service Association, Inc.

BEARING INFORMATION—CONTINUED

LARGER MOTORS

Frame	Drive bearing roller	Drive bearing ball	Non-drive bearing
355	—	6322	NU318
400	NU222	6022	NU218
450	NU226	6026	NU222
500	NU226	6026	NU222
560	NU230	6030	NU226
630	NU234	6034	NU230

C3 fit in all cases.

ENCLOSED MOTORS–REINFORCED CONSTRUCTION

Frame	Poles	Drive bearing	Non-drive bearing
160 G	2 - 8	NU209	6209ZC3
180 G	2 - 8	NU210	6210C3
200 H	2 - 8	NU212	6212C3
225 H	2 - 8	NU213	6213C3
250 G	2 - 8	NU314	6313C3
280 GR	2	NU217	6217C3
280 GR	4 - 8	NU2217	6217C3
315 GR, H	4 - 8	NU2219	6219C3
355 C	4 - 8	NU320	6316C3
400 C (Horiz.)	2 - 8	NU2222	6319C3
400 C (Vert.)	2 - 8	NU2222	7319B

EASA Technical Manual © 1996-2012, Electrical Apparatus Service Association, Inc.

CENTURY ELECTRIC, INC.

(Became MagneTek, now A.O. Smith, part of Regal-Beloit Corp.)

DATE CODES

Since 1938 all Century apparatus has carried serial codes that consist of a year letter and a month numeral. These letters and numerals were used in combination to designate the year and month of manufacture of the apparatus on whose nameplate they appear. Depending upon the type of apparatus the month numeral has been placed ahead of or behind the code letter denoting the year.

Generally the numeral was placed ahead of the letter when the nameplate also contained a serial number. Since January 1970, all serial codes have the numeral placed ahead of the letter and a full serial number, when used, follows the letter or is stamped in a blank space.

For full serial numbers used in the various plants see the table of Serial Number Assignments.

YEAR-LETTER DESIGNATION

Year	Code letter	Year	Code letter
1950	AE	1978	U
1951	AF	1979	W
1952	AG	1980	X
1953	AH	1981	Y
1954	AJ	1982	Z
1955	AK	1983	BA
1956	AL	1984	BB
1957	AM	1985	BC
1958	AN	1986	BD
1959	AP	1987	BE
1960	AS	1988	BF
1961	A	1989	BG
1962	B	1990	BH
1963	C	1991	BJ
1964	D	1992	BK
1965	E	1993	BL
1966	F	1994	BM
1967	G	1995	BN
1968	H	1996	BP
1969	J	1997	BR
1970	K	1998	BS
1971	L	1999	BT
1972	M	2000	BU
1973	N	2001	BW
1974	P	2002	BX
1975	R	2003	BY
1976	S	2004	BZ
1977	T		

MONTH-NUMERICAL DESIGNATION

Month	Code number	Month	Code number
January	1	July	7
February	2	August	8
March	3	September	9
April	4	October	10
May	5	November	11
June	6	December	12

SERIAL NUMBER ASSIGNMENTS

Plant of manufacture	Assigned numbers
St. Louis	10000 - 29999
Corinth	30000 - 39999
McMinnville	40000 - 49999
Lexington	50000 - 99999

TYPE DESIGNATIONS

SC - Polyphase - NEMA Design B
C - Permanent split capacitor - dual voltage
CX - Permanent split capacitor - single voltage & dual voltage
CXPM & CM - Permanent split capacitor - multispeed
CP - Capacitor start - capacitor run
CPM - Capacitor start -capacitor run - multispeed
CPF - Capacitor start - capacitor run - farm duty
CPX - Capacitor start - capacitor run - energy efficient
CS - Capacitor start
CSSM & CSM - Capacitor start - multispeed
CSF - Capacitor start - farm duty
CSR - Capacitor start - reversible
CSS - Capacitor start - special service
DN - Direct current
JM - Close coupled pump
JP - Close coupled pump

SC - Polyphase - NEMA Design B
SCAV - Polyphase energy efficient VAV inverter duty
SCE - Energy efficient
SCH - Polyphase - NEMA Design C
SCM&SCHM - Polyphase - multispeed
SCF - Polyphase - farm duty
SCTA - Polyphase - NEMA Design D, 5-8% slip
SCTB - Polyphase - NEMA Design D, 8-13% slip
SCTC - Polyphase - NEMA Design D, $16^{2}/_{3}$% slip
SCX - Polyphase - NEMA Design F
SR - Polyphase - wound rotor
SRT - Polyphase - wound rotor - hoist duty
SP - Split phase
SPSM & SPM - Split phase - multispeed
SPR - Split phase - reversible
SPS - Split phase - high torque
WCP - West Coast pump

BEARING INFORMATION

STANDARD BEARING SIZE FOR DRIPPROOF MOTORS

Standard AC motors		ABMA size	
Frame size	No. of poles**	Front end	Back end
48	All	6203	6203
56	All	6203	6203
S140T	All	6203	6205
140T	All	6203	6205
S180T	All	6204	6206
180T	All	6204	6206
S210T	All	6206	6307
210T	All	6206	6307
250T	All	6207	6309
280T	All	6210	6311
280TS	All	6210	6210
320T	All	6210	6312
320TS	All	6210	6210
360T	All	6212	6314
360TS	All	6212	6212
400T	All	6312	6316
400TS	All	6312	6312
440T	All	6314	6320
440TS	All	6314	6314
440TZ	**	6314	6322/6320

**Note: 6314 is largest bearing allowable for 2-pole motors.

EASA Technical Manual © 1996-2012, Electrical Apparatus Service Association, Inc.

BEARING INFORMATION—CONTINUED

STANDARD BEARING SIZE FOR ENCLOSED MOTORS

Standard AC motors		ABMA size	
Frame size	No. of poles**	Front end	Back end
48	All	6203	6203
56	All	6203	6203
S140T	All	6203	6205
140T	All	6203	6205
F180T	All	6204	6206
180T	All	6204	6206
F210T	All	6206	6307
210T	All	6206	6307
250T	All	6207	6309
280T	All	6210	6311
280TS	All	6210	6210
320T	All	6210	6312
320TS	All	6210	6210
360T	All	6212	6314
360TS	All	6212	6212
400T	All	6312	6316
400TS	All	6312	6312
440T	All	6314	6320
440TS	All	6314	6314
440TZ	All	6314	6322

NOTE: Unless otherwise specified, grease fill in bearing on open bearings to be 20% to 40%—all other type bearings to be 35% to 40%.
**Note that 6314 is largest bearing allowable for 2-pole motors.

BEARING SIZES FOR T-SHAFT AND CLOSE-COUPLED PUMP MOTORS

Frame	Drive end bearing		JM	JP	WCP	End opposite drive bearing
	Standard	NEMA C				
140	6205	6205	6206	6206	6107	6203
180	6206	6207	6207	6207	6207	6204
210	6307	6208 Open 6310 Encl	6310	6310	6310	6206
250	6309	6310	6310	6310	6310	6207
280	6311	6313	6313	6313	6313	6210
320	6312	6314	6314	6314	6314	6210
360*	6314	6316	6316	6316	6316	6212
400*	6316	6318	N/A	N/A	6318	6312
440*	6320	6320	N/A	N/A	6320	6314

* 6314 is maximum size for grease lubricated ball bearing operating at 2 pole speeds and is, therefore, the largest bearing we can supply on a 2 pole motor. N/A indicates those frame sizes where the NEMA JM and JP designations no longer apply–i.e., NEMA's largest JM is the 320JM; largest JP is 360JP.

BEARING INFORMATION—CONTINUED

Motor					Bearings			
					Front (End opposite drive)		Back (Drive end)	
Type	Frame size	Form	rpm (syn.)	Enclosure	Index no.	Size	Index no.	Size
RS-CS-SP-SC-DM	63-65-67	A-B	All	All	2	203	2	203
CS-SP-SC	63-65-67	C-D-E	All	All	2	203	2	203
CS-SP-SC-DM	71-73	A-B	All	All	3	203	3	203
RS	71-73	A-B	All	All	2	203	2	203
RS-CS-SC-DM	81-83	A-B-C-D	All	All	2	204	2	204
DM	82	A	All	All	2	204	2	204
RS-CS-SC-DM	91-92-93	A-B-C	All	All	2	204	2	204
SC-CS	91-92-93	N	All	All	2	204	2	204
RS	182-184	B	All	All	2	204	2	204
RS-SC	202-204	S-T	All	All	1	305	1	305
RS-CS-SC-DM	202-203-204	A-B-C-N	All	All	2	204	2	204
SC	203V-204V	A-B-C-N	3600	All	2	204	7	207
RS-SC-CS-SR-DN	224-225	J-W-S-T	All	All	1	306	1	306
SC-CS-SR	224-225	N	All	All	2	306	2	306
RS	A224-A225	S-W	All	All	1	306	1	306
SC-CS	224V-225V	J-W	All	All	1	306	7	207
SC-CS-SR-DN	254-256	J-S-T-W	All	All	1	308	1	308
SC-CS-SR	254-256	N	All	All	2	307	2	307
RS	254-256	J-N	All	All	1	306	1	306
RS	254-256	S	All	All	1	307	1	307
RS	254-256	J	All	All	1	306	1	307
SC-CS-RS-SR-DN	284-286	J-T-W	All	All	1	308	1	308
SC-CS-RS	284-286	N	All	All	2	308	2	308
SC-CS	254V	J	3600	All	1	307	7	207
SC-CS	284V	J	3600	All	1	308	7	210
CS-SC-SR	324-326	J-T-W	All	All	1	310	1	310
CS-SC	324-326	N	All	All	2	310	2	310
SC-CS	324V-326V	J	3600	All	1	310	7	210
DN	334-336	J-T	All	All	1	310	1	310
RS	364-365	S	All	All	1	310	7	311
SC	364-365	S	All	All	7	311	7	311
SC	364-365	J-S	3600	Open & Encl.	1	311	1	311
SR	364-365	S	All	All	1	311	7	311
SC-SR	364-365	J	1800 down	Open & Encl.	1	313	1	313
SC	364-365	J-N	1800 down	TEFC	2	311	2	313
SC	364-365	N	3600	TEFC	2	311	2	311
DN	374-375	J	All	All	1	313	1	313
DN	374-375	S	All	All	1	311	7	313
SC-SR	404-405	S-J-N	3600	All	1	312	1	312
SC-SR	404-405	J-N	1800 down	All	1	312	2	314
SC-SR	404-405	S	1800 down	All	7	312	7	312
SC	444-445	J-N-W-T	3600	All	1	313	1	313
SC-SR	444-445	S-T	All	All	7	313	7	313
SC-SR	444-445	J-N-W	1800 down	All	1	313	1	316
SC	444-445	T	3600	All	7	313	7	313
SC-SR	444-445	T	1800 down	All	1	313	7	313
DN	454-455	T	All	All	1	313	7	313
SC	504-505	J-N-W	3600	All	1	314	1	314
SC	504-505	S-T	3600	All	1	316	1	316
SC-SR	504-505	J-N-W	1800 down	All	1	314	1	318
SC-SR	504-505	S-T	1800 down	All	7	316	7	316
SC-SR	504-505	T	1800	All	1	316	7	316
DN	514-515-516	T	All	All	1	316	7	316
SC-SR	584S-586S	W	All	All	1	319	1	319
SC-SR	584-585-586	S	All	All	1	319	7	319
SC-SR	584-585-586	W	All	All	1	319	8	95
SC-SR	682-684-686	All	All	All	2	321	7	321

EASA Technical Manual © 1996-2012, Electrical Apparatus Service Association, Inc.

BEARING INFORMATION—CONTINUED

Motor					Bearings			
					Front (End opposite drive)		Back (Drive end)	
Type	Frame size	Form	rpm (syn.)	Enclosure	Index no.	Size	Index no.	Size
C-CS-SC-SP	44-45-46	F	All	Open-Encl.	2	202	2	202
SC	44-45-46	F	All	TEFC	5	202	5	202
C-CS-SC-SP	62-64-66-68-69	F	All	Open-Encl.	2	203	2	203
C-CS-SC-SP	62-64-66-68-69	F	All	TEFC	5	203	5	203
SC-CS	182-184	F	All	All	2	205	2	205
RS	182-184	F	All	Open-Encl.	2	204	2	205
SC-CS	E182-J182	F	All	All	2	203	2	205
SC-CS	J182-J184-K184	F	All	All	2	203	2	205
SC-CS	213-215	F	All	All	2	207	2	207
RS	213-215	F	All	Open-Encl.	2	306	2	306
SC-CS	E213-E215	F	All	All	2	205	2	207
SC-CS	J213-J215-K215	F	All	All	2	205	2	207
RS	254	F	All	Open-Encl.	2	306	1	308
SC-CP	254U-256U	F	All	All	1	308	1	308
SC-CP	A254U-A256U	F	All	All	2	207	1	308
SC	284U-286U	F	All	All	2	310	2	310
SC	A284U-A286U	F	All	All	2	308	2	310
SC	324U-326U	F	All	All	1	311	1	311
SC	364U-365U	F	3600	All	1	311	1	311
SC	364U-365U	F	1800 down	All	1	311	1	313
SC	404U-405U	F	3600	All	1	312	1	312
SC	404U-405U	F	1800 down	All	1	312	1	316
SC	444U-445U	F	3600	All	1	313	1	313
SC	444U-445U	F	1800 down	All	1	313	1	316

IDENTIFICATION INDEX

Index No.	Description
1	Single row, ball, open
2	Single row, ball, single shield
3	Single row, ball, double shield
4	Single row, ball, single seal
5	Single row, ball, double seal
6	Single row, ball, Single shield, single seal
7	Double row, ball, open
8	Roller bearing

CROCKER-WHEELER/ELLIOTT

(Out of business; contact Jasper Electric, Jasper, AL)

DATE CODES

Year	Code letter	Year	Code letter
1949	J	1952	M
1950	K	1953	N
1951	L	1954	P

Month	Code letter	Month	Code letter
January	A	July	G
February	B	August	H
March	C	September	J
April	D	October	K
May	E	November	L
June	F	December	M

TYPE DESIGNATIONS

Type	Description
NAS	Open dripproof
NES	Totally-enclosed, non-ventilated
NCS	Totally-enclosed, fan-cooled
NXS	Explosion-proof (Underwriters)
NCPS	Explosion-proof (Bureau of Mines)

BEARING INFORMATION

1200 AND 1800 RPM - STANDARD MOTORS

Frame	Drive (rear)	Front end
182 and 184	205 ball 3505 cartridge MR205E roller	205 ball 3505 cartridge
213 and 215	207 ball 3507 cartridge MR207E roller	205 ball 3505 cartridge
254 and 256	308 ball 3608 cartridge MR308E roller	207 ball 3507 cartridge
284 and 286	310 ball 3610 cartridge MR310E roller	308 ball 3608 cartridge
324 and 326	312 ball 3612 cartridge MR312# roller	310 ball 3610 cartridge
364 and 365	313 ball 3613 cartridge MR313E roller	211 ball 3511 cartridge
404 and 405	314 ball 3614 cartridge MR314E roller	212 ball 3512 cartridge
444 and 445	217 ball 3517 cartridge MR217E roller	212 ball 3512 cartridge

EASA Technical Manual © 1996-2012, Electrical Apparatus Service Association, Inc.

CROMPTON PARKINSON

(Now Brook Crompton N.A.)

BEARING INFORMATION

CROMPTON PARKINSON (AUSTRALIA) HORIZONTAL AND VERTICAL

Frame	Poles	Drive bearing	Non-drive bearing
D71	All	6202X2	6202X2
D80	All	6204ZZ	6202ZZ
D90	All	6205ZZ	6203ZZ
D100L	All	6206Z	6205
D112 (Horiz.)	All	6207Z	6207Z
D112 (Vert.)	All	6207Z	6207
D132 (Horiz.)	All	6208Z	6208Z
D132 (Vert.)	All	6208Z	6208
DW132	All	6308Z	6207
D/DW160	All	N209	6209
C/CW160	All	6310Z	6308
D/DW180	All	N210	6210
C/CW180	All	6312Z	6310
D/DW200	All	N212	6212
C/CW200	All	N213	6213
D/DW/C/CW225	All	N215	6215
D/C250	All	N217	6217
DW/CW250	All	N217	6215
D/C280 (Horiz.)	2	N218	6218
D/C/DW/CW280 (Horiz.)	4 & Up	N318	6218
D/C/DW/CW280 (Vert.)	4 & Up	6318	6218
D/C315 (Horiz.)	2	N219	6219
D/C/DW/CW315 (Horiz.)	4 & Up	N319	6218
D/C/DW/CW315 (Vert.)	4 & Up	6319	6218

DELCO PRODUCTS

(Now Lincoln Motors, part of Regal-Beloit Corp.)

DATE CODES

Date coding consists of a letter indicating the month and two figures indicating the year of manufacture.

Month	Code letter	Month	Code letter
January	A	July	G
February	B	August	H
March	C	September	J
April	D	October	K
May	E	November	L
June	F	December	M

TYPE DESIGNATIONS

Type	Description
J Line	All 56 Frames
T Line	All T-frame motors
U Line	All U-frame motors
L Line	All motors larger than NEMA frame
AIM Line	Automotive industrial motor
CIM Line	Chemical industrial motor
E^2 Line	High efficiency U- or T-frame motor

BEARING INFORMATION

STANDARD T-FRAME LINE

Frame	Drive end		Opposite drive end	
	Dripproof	TEFC	Dripproof	TEFC
140	77505	77505	77503	77503
180	77606	77606	77505	77505
210	77607	77607	77507	77507
250	77609	77609	77507	77508
280	77610	77610	77509	77510
320	77612	77612	77510	77511
360	77613	77613	77510	77513
400	77615	77615	77513	77515
440	77618	77618	77514	77518

STANDARD U-FRAME LINE

Frame	Drive end	Opposite drive end
180	77505	77503
210	77507	77505
250	77609	77508
280	77610	77510
320	77612	77511
360	77613	77513
400	77615	77515
440 (2 pole)	77615	77615
440 (4 pole +)	77618	77518

ENERGY EFFICIENT (E^2) T-FRAME LINE

Frame	Drive end	Opposite drive end
140	77505	77503
180	77606	77505
210	77607	77507
250	77609	77508
280	77610	77510
320	77612	77511
360	77613	77513
400	77615	77515
440	77618	77518

EASA Technical Manual © 1996-2012, Electrical Apparatus Service Association, Inc.

BEARING INFORMATION—CONTINUED

ENERGY EFFICIENT (E^2) U-FRAME LINE

Frame	Drive end	Opposite drive end
180	77505	77503
210	77507	77505
250	77609	77508
280	77610	77510
320	77612	77511
360	77613	77513
400	77615	77515
440	77618	77518

L LINE

Frame	Open		TEFC	
	Drive end	Opposite drive end	Drive end	Opposite drive end
500	77222	77617	77222	77617
580	1322	77522	—	—
685	—	—	3324	3224

DOERR ELECTRIC CORP.

(Plant closed. For data, contact Nidec Motor Corp.)

DATE CODING

Date coding is part of the model number. The sequence of stamping in the model number blank is:

1. Model number
2. Suffix letter if required
3. Date code
4. Plant number (since 1971)

Date coding from January 1954 to March 1971 is as shown in the tables below, a letter for the month followed by a letter for the year. For example, 60001-A PA was made in February 1964.

1954 - 1963

January	A	1954	P
February	B	1955	Q
March	C	1956	R
April	D	1957	S
May	E	1958	T
June	F	1959	V
July	G	1960	W
August	H	1961	X
September	J	1962	Y
October	K	1963	Z
November	L		
December	M		

1964 - 1971

January	N	1964	A
February	P	1965	B
March	Q	1966	C
April	R	1967	D
May	S	1968	E
June	T	1969	F
July	U	1970	G
August	V	1971	H
September	W		
October	X		
November	Y		
December	Z		

Since April 1, 1971, date coding is a letter for the month and two figures for the year. For example, 600668-A G71-3 was made in July, 1971.

January	A	July	G
February	B	August	H
March	C	September	J
April	D	October	K
May	E	November	L
June	F	December	M

TYPE DESIGNATIONS

Electrical

K - Capacitor start induction run
S - Split phase
C - Permanent split capacitor
T - Capacitor start and run
R - Repulsion induction
P - Polyphase
D - Direct current
M - Shaded pole
F - Direct current permanent magnet field
W - Direct current permanent magnet field with capacitor
V - Split phase start capacitor run

Mechanical

- - Dripproof, open, splash-proof
F - Fan-cooled
N - Totally-enclosed, non-ventilated
CO - Open fan duty air over
C - Totally-enclosed, fan duty, air over
X - Open, fan- or blower-cooled
FU - Fan-cooled, explosion-proof
NU - Non-ventilated, explosion-proof
CU - Totally-enclosed, fan duty, air over, explosion-proof
NB - Open, blower-cooled, forced ventilated
L - Liquid cooled

BEARING INFORMATION

The bearings used on Doerr Electric Corp. motors are of the double shielded, permanently lubricated type. Chevron SRI-2 (-20 to +350°F) is the lubricant normally used for general purpose class A through H applications.

Farm duty motors are furnished with Beacon 325 (-65 to +250°F) on class A and B, and Mobil #28 (-80 to +350°F) on class F and H motors. For endshields having regreasable facilities, use the above grease for similar motor class.

In most cases, the lubricant is sufficient for the life of the bearings; relubrication is not possible. Complete replacement is suggested if there are indications that the bearing is near the end of its useful life.

EASA Technical Manual © 1996-2012, Electrical Apparatus Service Association, Inc.

DRESSER CRANE

(Now Lift Tech International)

DATE CODES

Date codes are shown as two letters, the first for the month and the second for the year, in accordance with the following tables.

First letter—Month			
January	N	July	U
February	O	August	V
March	P	September	W
April	R	October	X
May	S	November	Y
June	T	December	Z

Second letter—Year			
1950	G	1969	D
1951	H	1970	E
1952	J	1971	F
1953	K	1972	G
1954	L	1973	H
1955	M	1974	J
1956	N	1975	K
1957	P	1976	L
1958	R	1977	M
1959	S	1978	N
1960	T	1979	P
1961	V	1980	R
1962	W	1981	S
1963	X	1982	T
1964	Y	1983	V
1965	Z	1984	W
1966	A	1985	X
1967	B	1986	Y
1968	C	1987	Z

EASA Technical Manual © 1996-2012, Electrical Apparatus Service Association, Inc.

DYNA CORP.

(Formerly Brown & Brockmeyer, now out of business)

DATE CODES

A five-digit motor number was preceded by a two-digit year code.

1950	25
1951	26
1952	27
1953	28
1954	29
1955	30
1956	31
1957	32
1958	33
1959	34

1960	35
1961	36
1962	37
1963	38
1964	39
1965	40
1966	41
1967	42
1968	43

BEARING INFORMATION

Frame series	Bearing number—Front end	Bearing number—Back end
200	205	204
224	206	206
225	206	206
254	206	206
56	203	203
66	205	204
180U	205	204
210U	206	205
250U	308	308
280U	309	309
140T	205	203
180T	206	205
210T	308	206
250T	309	309

EASA Technical Manual © 1996-2012, Electrical Apparatus Service Association, Inc.

EATON CORP.

(Now Dynamatic Corp.)

DATE CODES

Table 1 was used through December 1980, where a number 1 through 12 was the month (i.e., 1 = Jan., 2 = Feb., etc.) and a letter from the table was the year of manufacture.

Example: 6R-00000 means June, 1975.

Table 2, commencing with January 1981, uses two letters followed by the serial number. The first letter is for the month, the second for the year.

Example: RV-00000 means April, 1982.

This code followed by the serial number is to appear on the nameplate.

TABLE 1

1959	X	1970	J
1960	Y	1971	K
1961	Z	1972	L
1962	A	1973	M & N
1963	B	1974	P
1964	C	1975	R
1965	D	1976	S
1966	E	1977	T
1967	F	1978	U
1968	G	1979	V
1969	H	1980	W

TABLE 2

January	N	July	U
February	P	August	V
March	Q	September	W
April	R	October	X
May	S	November	Y
June	T	December	Z

1981	U	1987	C	1993	J
1982	V	1988	D	1994	K
1983	W	1989	E	1995	L
1984	X	1990	F	1996	M
1985	Y	1991	G	1997	N
1986	Z	1992	H		

TYPE DESIGNATIONS

Type designations consist of two letters and, for three-phase motors, a figure.

The first letter designates the style of motor housing.

D - Open, dripproof
E - Totally-enclosed, fan-cooled
F - Dripproof, blower-cooled
G - Totally-enclosed, blower-cooled
T - Totally -enclosed, non-ventilated
X - Explosion-proof, totally-enclosed, fan-cooled
N - Partial motor

The second letter designates the electrical type.

D - Direct current
P - Polyphase squirrel cage induction
S - Polyphase synchronous induction

The figure designates the torque and current characteristics of a polyphase squirrel cage motor.

1 - NEMA Design A or B
5 - NEMA Design C
6 - NEMA Design D 5-8% slip
7 - NEMA Design D 8-13% slip

BEARING INFORMATION

Frame	Bearing
210	207
250	209
280	210
320	211
360	213
400	215
440	218

EBERLE, S.A.

BEARING INFORMATION

143T TO 445T NEMA FRAME TEFC MOTORS

Frame	Poles	Drive bearing	Non-drive bearing
143TC	2-4	6205	6202
145TC	2-4-6	6205	6202
182TC	2-4-6-8	6206	6203
184TC	2-4-6-8	6206	6203
213TC	2-4-6-8	6308	6206
215TC	2-4-6-8	6308	6206
254TC	2-4-6-8	6309	6306
256TC	2-4-6-8	6309	6306
284TC	4-6-8	6310	6210
286TC	4-6-8	6310	6210
324TC	4-6-8	6312	6212
326TC	4-6-8	6312	6212
364TC	4-6-8	6313	6213
365TC	4-6-8	6313	6213
404TC	4-6-8	6315	6214
405TC	4-6-8	6315	6214
444TC	4-6-8	6318	6216
445TC	4-6-8	6318	6216
284TSC	2	6310	6210
286TSC	2	6310	6210
324TSC	2	6312	6212
326TSC	2	6312	6212
364TSC	2	6312	6212
365TSC	2	6312	6212
404TSC	2	6314	6214
405TSC	2	6314	6214
444TSC	2	6316	6216
445TSC	2	6316	6216

EASA Technical Manual © 1996-2012, Electrical Apparatus Service Association, Inc.

BEARING INFORMATION—CONTINUED

182T TO 505U NEMA FRAME OPEN DRIPPROOF MOTORS

Frame	Poles	Drive bearing	Non-drive bearing	Roller bearing (optional)
182T	2 to 8	6306	6203	—
184T	2 to 8	6306	6203	—
213T	2	6308	6207	—
213T	4-6-8	6308	6207	—
215T	2 to 8	6308	6207	—
254T	2 to 8	6309	6207	—
256T	2 to 8	6309	6207	—
284TS	2	6311	6210	—
284T	4-8	6311	6210	NU311
284T	6	6311	6210	NU311
286TS	2	6311	6210	—
286T	4	6311	6210	NU311
286T	6-8	6311	6210	NU311
324TS	2	6312	6210	—
324T	4	6312	6210	NU312
324T	6-8	6312	6210	NU312
326TS	2	6312	6210	—
326T	4-6-8	6312	6210	NU312
364TS	2	6312	6212	—
364T	4-6-8	6313	6213	NU313
365TS	2	6312	6212	—
365T	4-6-8	6313	6213	NU313
404TS	2	6314	6213	—
404T	4-8	6315	6213	NU315
404T	6	6315	6213	NU315
405TS	2	6314	6213	—
405T	4-6-8	6315	6213	NU315
444TS	2	6316	6216	—
444T	4-6-8	6318	6216	NU318
445TS	2	6316	6216	—
445T	4-6-8	6318	6216	NU318
447TS	2	6316	6216	—
447T	4-6-8	6318	6216	NU318
505USS	2	6316	6316	—
505US	4	6317	6316	NU317
505UZ	6-8	6320	6316	NU320

EASA Technical Manual © 1996-2012, Electrical Apparatus Service Association, Inc.

BEARING INFORMATION—CONTINUED

182TC TO 447TC NEMA FRAME OPEN DRIPPROOF C-FACE MOTORS

Frame	Poles	Drive bearing	Non-drive bearing	Roller bearing (optional)
182TC	2 to 8	6306	6203	—
184TC	2 to 8	6306	6203	—
213TC	2	6308	6207	—
213TC	4-6-8	6308	6207	—
215TC	2 to 8	6308	6207	—
254TC	2 to 8	6309	6207	—
256TC	2 to 8	6309	6207	—
284TSC	2	6311	6210	—
284TC	4-8	6311	6210	NU312
284TC	6	6311	6210	NU312
286TSC	2	6311	6210	—
286TC	4	6311	6210	NU312
286TC	6-8	6311	6210	NU312
324TSC	2	6312	6210	—
324TC	4	6312	6210	NU312
324TC	6-8	6312	6210	NU312
326TSC	2	6312	6210	—
326TC	4-6-8	6312	6210	NU312
364TSC	2	6312	6212	—
364TC	4-6-8	6313	6213	NU313
365TSC	2	6312	6212	—
365TC	4-6-8	6313	6213	NU313
404TSC	2	6314	6213	—
404TC	4-8	6315	6213	NU315
404TC	6	6315	6213	NU315
405TSC	2	6314	6213	—
405TC	4-6-8	6315	6213	NU315
444TSC	2	6316	6216	—
444TC	4-6-8	6318	6216	NU318
445TSC	2	6316	6216	—
445TC	4-6-8	6318	6216	NU318
447TSC	2	6316	6216	—
447TC	4-6-8	6318	6216	NU318

EASA Technical Manual © 1996-2012, Electrical Apparatus Service Association, Inc.

BEARING INFORMATION—CONTINUED

56 TO 355 IEC FRAME TEFC MOTORS

Frame	Poles	Drive bearing	Non-drive bearing	Roller bearing (optional)
56	2-4-6-8	6200	6200	—
63	2-4-6-8	6201	6201	—
71	2-4-6-8	6203	6200	—
80	2-4-6-8	6204	6201	—
90S	2-4-6-8	6205	6202	—
90L	2-4-6-8	6205	6202	—
100L	2-4-6-8	6206	6203	—
112M	2-4-6-8	6306	6204	—
132S	2-4-6-8	6308	6206	—
132M	2-4-6-8	6308	6206	—
160M	2-4-6-8	6309	6306	—
160L	2-4-6-8	6309	6306	—
180M	2	6310	6210	—
180M	4-6-8	6310	6210	NU 313
180L	2	6310	6210	—
180L	4-6-8	6310	6210	NU 310
200M	2	6312	6212	—
200M	4-6-8	6312	6212	NU 312
200L	2	6312	6212	—
200L	4-6-8	6312	6212	NU 312
225S	2	6312	6212	—
225S	4-6-8	6313	6213	NU 313
225S/M	2	6312	6212	—
225S/M	4-6-8	6313	6213	NU 313
250S/M	2	6314	6214	—
250S/M	4-6-8	6314	6214	NU 314
280S/M	2	6316	6216	—
280S/M	4-6-8	6316	6216	NU 316
315S/M	2	6316	6316	—
315S/M	4-6-8	6317	6316	NU 317
355M/L	2	6317	6316	—
355M/L	4-6-8	6322	6317	NU 322

ELECTRA GEAR OPERATIONS

DATE CODE CHART

Date Code System 1967 - 1977

Year

Sales/Model Order Number

7A-80123-0A

Place of Manufacture

Year - Month

A = Anaheim, CA
M = Muskegon, MI
V = Ashland, VA

Date Code System 1978 - Up

Year

Sales/Model Order Number

8E-30000-QA through 89999

Year

Month

8EP-01000 through 24999	Parts
IEP-01000 through 23999	Parts
OET-01000 through 23999	Stock transf. of parts to Norristown, PA
9ES-12500 through 23999	Service/Repair
OEN-24000 through 24999	Service/Repair Norristown, PA
8SN-90000 through 99999	Stock Number
CM-25000 through 29999	Credit Memo

TWO LETTER SYSTEM USED SINCE 1973. YEAR PROCEDES MONTH.

Year	Plant	Letter	Year	Letter	Month	Letter
1973	Anaheim	G	1981	T	January	A
1973	Ashland	H	1982	U	February	B
1974	Anaheim	I	1983	V	March	C
1974	Ashland	J	1984	W	April	D
1975	Anaheim	K	1985	X	May	E
1975	Ashland	L	1986	Y	June	F
1976	Anaheim	M	1987	Z	July	G
1976	Muskegon	N	1988	A	August	H
1977	Anaheim	O	1989	B	September	I
1977	Muskegon	P	1990	C	October	J
1978	Anaheim	Q	1991	D	November	K
1979	Anaheim	R	1992	E	December	L
1980	Anaheim	S	1993	F		

EASA Technical Manual © 1996-2012, Electrical Apparatus Service Association, Inc.

TYPE DESIGNATIONS

Frame designations for AC motors

1. Motor Enclosure
   V - Open dripproof
   C - TEFC (totally-enclosed, fan-cooled)
   G - TEFC, explosion-proof
   E - TENV (totally-enclosed, non-ventilated)
   N - TENV, explosion-proof

2. Motor-Mounted Brake
   Designates motor-mounted brake

3. Housing Length
   K, M, P, R, T

4. Motor Frame Size

5. Faces and Flanges
   C - C face
   YC - Special C face
   D - D Flange
   YD -Special D flange

6. Shafts
   Z - Special shaft

Example: C B P 145T C Z

Frame designations for helical gearmotors

1. Motor Enclosure
   C - TEFC (totally-enclosed, fan-cooled)
   G - TEFC, explosion-proof
   E - TENV (totally-enclosed, non-ventilated)
   N - TENV, explosion-proof

2. Motor-Mounted Brake
   Designates motor-mounted brake

3. Housing Length
   K, M, P, T

4. Motor Frame Size

5. Spline on Motor Shaft or Motor Adapter
   A - 17-tooth spline to fit 6410, 6910, 7410, & 7910 gear ends
   C - C face motor adapter

6. Gear End Frame Size
   6410 - Helical-fixed base
   6910 - Helical planetary-fixed base
   7410 - Helical-ring base
   7910 - Helical planetary-ring base

7. Special Shafts or C Face
   C - C face
   Y - Special input zhaft
   Z - Special output shaft

Example: C B K 143T A 6140 C

TYPE DESIGNATIONS—CONTINUED

Frame designations for worm gearmotors

1. Motor Enclosure
   V - Open dripproof
   C - TEFC (totally-enclosed, fan-cooled)
   G - TEFC, explosion-proof
   E - TENV (totally-enclosed, non-ventilated)
   N - TENV, explosion-proof

2. Motor-Mounted Brake
   Designates motor-mounted brake

3. Housing Length
   K, M, P, R, T
   Refer to dimension drawings

4. Motor Frame Size
   NEMA 48, 143T, 145T, 182T, 184T, 213T, 215T

5. Spline on Motor Shaft or Motor Adapter
   W - 17-tooth spline to fit 177, 217, 267, HIA-217, HIA-267, H2-300, H2-350, & H3-400 gear ends
   X - 19 Tooth spline to fit 300, 350, 400, & H4-400 gear ends
   V - 28-tooth spline to fit 500 & 600 gear ends
   C - C face motor adapter
   D - D flange motor adapter

Note: If W, X, or V letter is not included in designation, motor shaft is not splined; it has straight shaft and keyway.

6. Gear End Mounted Brake
   Designates gear end mounted brake.

7. Gear End Frame Size

Center distance	Single worm	Worm planetary	Helical worm	Double worm
1.75”	177	177PIA		
2.15”	217		HIA-217	177P-217
2.68”	267		HIA-267	177P-267
3.00”	300		H2-300	217P-300
3.50”	350		H2-350	217P-350
4.00”	400		H3-400	217P-400
			H4-400	
5.00”	500		H5-500	267P-500
6.00”	600		H6-600	300P-600

8. Type of Gear End Mounting
   A - Foot mount, solid shaft, single end output
   AL - Foot mount, solid long shaft, single end output
   AH - Foot mount, hollow shaft (bore size required)
   B - Angle bracket mounting
   BH - Angle bracket mounting - hollow shaft
   H - Torque arm - hollow shaft
   JB - Angle bracket mounting
   JBL - Angle bracket mounting, long shaft
   JBH - Angle bracket mounting - hollow shaft
   M - Without base
   ML - Without base, long shaft
   RL - Ring base, long shaft
   RH - Ring base - hollow shaft

9. Special Shafts or C Face
   C - C face
   D - Standard double output shaft extension
   Y - Special input shaft (worm)
   Z - Special output shaft

Example: C B K 143T W B 217 AL Z

EASA Technical Manual © 1996-2012, Electrical Apparatus Service Association, Inc.

BEARING INFORMATION

	Frame	Shaft end bearing	Opp. shaft end bearing	Bearing type
Current production	56	205	203	ABEC-1-Single Shield
	140T	205	203	ABEC-1-Single Shield
	180T	207	205	ABEC-1-Single Shield
	210T	307	207	ABEC-1-Single Shield
Obsolete frames	66	204	204	ABEC-1-Double Shield
	180	205	205	ABEC-1-Double Shield
	210	306	306	ABEC-1-Double Shield
	250U	307	307	ABEC-1-Double Shield
	250T	309	208	ABEC-1-Single Shield
	280U	309	309	ABEC-1-Double Shield
	280T	311	210	ABEC-1-Single Shield
	320U	310	310	ABEC-1-Double Shield
	320T	312	211	ABEC-1-Single Shield
	360U	311	311	ABEC-1-Double Shield
	360T	313	212	ABEC-1-Single Shield
	400U	313	313	ABEC-1-Double Shield
	400T	315	213	ABEC-1-Single Shield

EASA Technical Manual © 1996-2012, Electrical Apparatus Service Association, Inc.

ELECTRIC APPARATUS CO.

DATE CODES

The date code is part of the serial number. In 1969 and 1970 the first digit (9 for 1969, 7 for 1970) indicated the year and the next two digits the week of manufacture. Beginning in 1971 the first two digits (71 for 1971, etc.) indicated the year and the third digit the quarter of the year when it was manufactured: e.g.,713XXXXXXX = third quarter of 1971.

The first digit indicates the quarter and the second and third digits the year of manufacture. For example, 293-xxxxxx-xx indicates the second quarter of 1993.

TYPE DESIGNATIONS

TYPE	DESCRIPTION
BA	NEMA Design B
BB	NEMA Design B but with higher than normal pull-out torque
BC	Similar to NEMA Design B except lower locked rotor amps and starting torque
CA	NEMA Design C
CB	NEMA Design C but with higher than normal locked rotor and breakdown torques
AA	NEMA Design A
AB	NEMA Design A but with higher than normal locked rotor and breakdown torques
DA	NEMA Design D 5-8% slip
DB	NEMA Design D 8-13% slip
DC	Similar to NEMA Design D except above 13% slip
TA	Torque Motor with 50% of locked torque occurring above 75% of synchronous speed
TB	Torque motor with 50% of locked torque occurring at 75% of synchronous speed or slower
MB	Multispeed motor resembling a Design B motor
MC	Multispeed motor resembling a Design C motor
MDA	Multispeed motor 5-8% slip
MDB	Multispeed motor 8-13% slip
MDC	Multispeed motor slip over 13%

BEARING INFORMATION

Frame	Back bearing	Front bearing
C180	205KDD	205KDD
C210	206KDD	206KDD
C250	309KDD	309KDD
C280	310KDD	210KDD
C320	312KDD	312KDD
C360	313KDD	313KDD
C400	314KDD	314KDD
C440	317KDD	317KDD
C440 2 pole	216KDD	216KDD

EASA Technical Manual © 1996-2012, Electrical Apparatus Service Association, Inc.

ELEKTRIM MOTOR DIV., TOOLMEX CORP.

DATE CODES

The first letter at the beginning of the serial number indicates the year and the second letter the month of manufacture.

SF Standard efficiency motor
SG Energy efficient motor
SGM Energy efficient motor modified at the factory
SGC Energy efficient, severe duty motor

BEARING INFORMATION

NEMA FRAME MOTORS

Frame size	Drive end	Non-drive end
143T-145T	6205	6205
182T-184T	6306	6306
213T & 215T	6308	6308
254T-256T	6309	6309
284T, TS-286T, TS	6311	6311
324T, TS-326T, TS	6312C3	6312C3
364T, TS-365T, TS	6313C3	6313C3
404T-405T	6315C3	6315C3
405TS	6313C3	6313C3
444T-445T	6318C3	6317C3
444TS-445TS	6315C3	6315C3
447T	NU320	6317C3
505UZ	NU320	6317C3
586-587	NU322	6322C3
586S (2 pole)	6317	6317

BEARING INFORMATION—CONTINUED

IEC FRAME MOTORS

Frame size	Poles	Drive end	Non-drive end
56	2 & 4	6201ZZC6	6201ZZC6
63	2 & 4	6202ZZC6	6202ZZC6
71	2 - 6	6203ZZC6	6203ZZC6
80	2 - 6	6204ZZC6	6204ZZC6
90	2 - 8	6205ZZP6C6	6205ZZP6C6
100	2 - 8	6206ZZP6C6	6206ZZP6C6
112	2 - 8	6306ZZP6C6	6306ZZP6C6
132	2	6308ZZC6	6308ZZC6
132	4 - 8	6308ZC6	6308ZC6
160	2 - 8	6309ZC6	6309ZC6
180	2 - 8	6311C6	6311C6
200	2	6312C3	6312
200	4 - 8	NU312C3	6312
225	2	6313C3	6313
225	4 - 8	NU313C3	6313
250	2	6313C3	6315
250	4 - 8	NU315C3	6315
280	2	6315C3	6317C3
280	4 - 8	NU317C3	6317C3

EASA Technical Manual © 1996-2012, Electrical Apparatus Service Association, Inc.

ELIN

(U.S. agent: American Elin Corp.)

BEARING INFORMATION

TYPE MKG

Frame size	Poles	Drive end	Non-drive end
180	All	6310-2ZC3	6310-2ZC3
200	All	6312-2ZC3	6312-2ZC3
225	2	6312-2ZC3	6312-2ZC3
225	4 - 8	6314-2ZC3	6314-2ZC3
250	All	6314-2ZC3	6314-2ZC3
280	2	NU314C3	6314C3
280	4 - 8	NU316	6316C3
315	2	NU316C3	6316C3
315	4 - 8	NU318	6318C3
355	2	NU316C3	6316C3
355	4 - 8	NU320	6320C3
400	2 (Horiz.)	NU318C3	6318C3
400	4 - 8 (Horiz.)	NU322	6322C3
400	2 (Vert.)	Contact Elin	Contact Elin
400	4 - 8 (Vert.)	NU322	7322B

TYPE LKM-4

Frame size	Poles	Drive end	Non-drive end
71	All	6202-2ZC3	6202-2ZC3
80	All	6204-2ZC3	6203-2ZC3
90	All	6205-2ZC3	6204-2ZC3
100	All	6206-2ZC3	6205-2ZC3
112	All	6306-2ZC3	6206-2ZC3
132	All	6308-2ZC3	6208-2ZC3
160M	All	6309-2ZC3	6309-2ZC3
160L	All	6310-2ZC3	6309-2ZC3
180	All	6310-2ZC3	6309-2ZC3

ELLIOTT CO.

(Formerly Crocker-Wheeler, now out of business)

DATE CODES

From 1949 on, date coding was two letters: the first for the year; the second for the month.

J—1949	P—1954	W—1959
K—1950	R—1955	X—1960
L—1951	S—1956	Y—1961
M—1952	T—1957	Z—1962
N—1953	U—1958	A—1963

A—January	E—May	J—September
B—February	F—June	K—October
C—March	G—July	L—Novenber
D—April	H—August	M—December

In 1955 the month code was dropped. The first letter signified the place of manufacture, the second letter signified the year per above table. The month code was reestablished in 1957 per the 1949 coding system.

TYPE DESIGNATIONS

TYPE	DESCRIPTION
NAS	Open dripproof
NES	Totally-enclosed, non-ventilated
NCS	Totally-enclosed, fan-cooled
NXS	Explosion-proof (Underwriters)
NCPS	Explosion-proof (Buerau of Mines)

BEARING INFORMATION

1200 AND 1800 RPM–STANDARD MOTORS

Frame	Drive (rear)	Front end
182 and 184	205 ball 3505 cartridge MR205E roller	205 ball 3505 cartridge
213 and 215	207 ball 3507 cartridge MR207E roller	205 ball 3505 cartridge
254 and 256	308 ball 3608 cartridge MR308E roller	207 ball 3507 cartridge
284 and 286	310 ball 3610 cartridge MR310E roller	308 ball 3608 cartridge
324 and 326	312 ball 3612 cartridge MR312# roller	310 ball 3610 cartridge
364 and 365	313 ball 3613 cartridge MR313E roller	211 ball 3511 cartridge
404 and 405	314 ball 3614 cartridge MR314E roller	212 ball 3512 cartridge
444 and 445	217 ball 3517 cartridge MR217E roller	212 ball 3512 cartridge

EASA Technical Manual © 1996-2012, Electrical Apparatus Service Association, Inc.

EMERSON ELECTRIC CO.

(Became Emerson Motor Technologies, now Nidec Motor Corp.)

DATE CODES

The date code is part of the serial number. The first letter designates the month and the two figures the year. Example: A76 means January 1976.

January	A	July	G
February	B	August	H
March	C	September	J
April	D	October	K
May	E	November	L
June	F	December	M

BEARING INFORMATION

Bearing	Application
6203 - .625	48 frame and old 56 frame (6203 with .625 I.D.)
6203	New 56 frame for 3/4 hp and lower and opposite drive end for over 3/4 hp.
6304	Drive end for 56 frame over 3/4 hp and both ends of 143T and 145T frames.

TYPE DESIGNATIONS

Motor Types

F - Shaded pole
K - Permanent split capacitor
KK, T - Capacitor start - capacitor run
KS, C - Capacitor start
P - Polyphase
S - Split phase
R, RK - Resistance start - capacitor run

EMD Catalog Coding

JP - Jet pump
SP, SPD - Sump pump
EC - Evaporative cooler
F - Shaded pole
K - Permanent split capacitor
FC - Fan-cooled
RAC, RAF, RAK - Room air conditioner
P - Polyphase
DW - Dishwasher
SW - Swimming pool
LW - Laundry automatic washer
LD - Laundry dryer
C - Compactor
W - Laundry wringer washer
FD - Farm duty
EZ - “EZ Fit” belt drive blower
RF - Refrigerator fan

FAIRBANKS MORSE

(Out of business)

DATE CODES

MOTORS MADE AT BELOIT

Year	AC motors, alternators and single-phase motors	DC motors & generators	Year	AC motors, alternators and single-phase motors	DC motors & generators
1950	595801	X73701	1960	B5550	X81750
1951	596501	X74401	1961	B5950	X81950
1952	597501	X75401	1962	B6250	X82140
1953	B99550	X78680	1963	B6770	X82330
1954	B1362	X78919	1964	B7240	X82412
1955	B2554	X79497	1965	B7481	X82464
1956	B3300	X80600	1966	B7568	X82474
1957	B4100	X81200	1967	B8054	X82622
1958	B4600	X81410	1968	B8826	X82698
1959	B5100	X81550			

BELOIT A–L MOTORS

June 1963 through December 1963	3-100000-001 through 3-281153-001	January 1964 through May 1964	4-102333-001 through 4-190124-001

BELOIT E–G MOTORS

	Jan.	Feb.	Mar.	April	May	June	July	Aug.	Sept.	Oct.	Nov.	Dec.
1964	NY	OY	PY	RY	SY	TY	UY	VY	WY	XY	YY	ZY
1965	AA	BA	CA	DA	EA	FA	GA	HA	JA	KA	LA	MA

NOTE: On E-G motors the above letters only appear on some sizes, but on Frame 254U and larger the letters are followed by 7-digit numbers. (Complete number should be submitted as part of nameplate data.)

LIST OF UNITS SHIPPED AFTER 1968

Year	AC motors & alternators	DC motors & generators
1969	500729-R1	X82794
1970	502854-R1	X82839
1971	503298-R6	X82860
1972	503843-R1	X83020
1973	504021-R1	X83020
1974	504232-R1	X83020
1975	504371-R1	X83020
1976	504519-R1	X83023

EASA Technical Manual © 1996-2012, Electrical Apparatus Service Association, Inc.

DATE CODES—CONTINUED

FAIRBANKS MORSE MOTORS MADE AT FREEPORT

Axial air gap motors		Conventional motors	
Serial number	Year	Serial number	Year
A 75000		F75742	1950
To	1950-51	F97621	1951
A 85000		F144301	1952
To	1951	F180201	1953
A 90000		F186938	1954
To	1951-52	F215941	1955
A 95000		F250394	1956
To	1952	F322801	1957
A 100900		F347348	1958
To	1953	F369440	1959
A 113000		F390418	1960
To	1954	F414513	1961
A 122300		F437209	1962
To	1955	F448400	1963
A 136300			
To	1956		
A 148700			
To	1957		
A 163000			
To	1958		
A 173000			
To	1959		
A 180000			
To	1960		
A 188000			
To	1961		
A 193000			

Inquiries regarding axial air gap motors of above serial numbers should be directed to the Imperial Electric Company, Akron, Ohio.

Last motor built at Freeport–No. F459413.

TYPE DESIGNATIONS

All types designate electrical and mechanical modifications. The letter Z separates the electrical from the mechanical. Electrical is always to the left of the Z, mechanical to the right.

Electrical modifications	T & U	Original NEMA
Standard general purpose Design B	K	Q, QS
Super standard Design B	BK	
High torque Design C	KO	QO
High torque reversing duty	KP	QP
High torque Design D 5-13% slip	KF	QF
Elevator motors	KR	QR
Hoist motors	KL	QL
Low torque Design F	KB	QK, QB
Part winding start	KI	QI
Multispeed constant torque	KX	QX
Multispeed constant horsepower	KM	QM
Multispeed variable torque	KN	QN
General purpose wound rotor	KV	QV
Wound rotor - intermittent duty	KH	QH
Capacitor start - inductor run	WC	
Capacitor start - capacitor run	WCC	
Split phase	WS	
Synchronous motor	T	
Synchronous motor part winding start	TI	
Synchronous generator	G	
DC motor	D	
DC generator	DG	
DC motor - elevator, crane, hoist duty	DR	
DC motor adjustable speed tapered hp	DX	
DC motor adjustable speed constant hp	DM	
Oilfield motor single phase	OF	
Oilfield motor polyphase low slip	OF-1	
Oilfield motor polyphase high slip	OF-2	

MECHANICAL MODIFICATIONS

Ball bearing - protected type	K	Weather protected - NEMA Type II	L
Ball bearing - dripproof	D	Marine type	M
Ball bearing - single bearing	J	Lint free motor	N
Ball bearing - three bearing	T	Flange mounted	F
Sleeve bearing - protected type	BK	Engine type - no bearings or shaft	O
Sleeve bearing - dripproof	BD	Splash-proof	S
Sleeve bearing - pedestal yype	BP	Vertical solid shaft - down thrust	U
Sleeve bearing - splash-proof	BS	Vertical solid shaft - up thrust	IU
Sleeve bearing - three bearing	BT	Vertical hollow shaft - down thrust	V
Totally-enclosed, non-ventilated	E	Vertical hollow shaft - up thrust	IV
Totally-enclosed, fan-cooled	C	Vertical - extra heavy thrust	W
Explosion-proof	X	Weather I	Y
Enclosed - pipe ventilated	H	Sleeve bearings	B
Enclosed - waterproof	R	Pedestal type	P
Enclosed collector rings	G		

EASA Technical Manual © 1996-2012, Electrical Apparatus Service Association, Inc.

BEARING INFORMATION

ROLLING BEARINGS FOR F-M MOTORS
AC INDUCTION

Frame	Types QZA		Frame	Type WCZK	
	Free arm	Pulley end		Free end	Pulley end
3555-L3555	B04105	B52203	182-4	ND 8504	ND 8505
4060-L4060	B02206	D52304			
4267-L4267	B02206	D52304	213-5	SKF6306RS	SKF6306RS
4570-L4570	B02207	D52305	254-6	SKF6307RS	SKF6308RS
5285-L5285	B02208	D52306			
6095-L6095	B02209	D52307			
60105-L60105	B02209	D52307			
65117	B02211	D52309			
70130	B14214	D52311			

Frame	Types QZKU-QOZKU		Types QZCU-QOZCU		Types QZU-QOZU QZUX-QOZUX		Frame	Type QZKV	
	Upper arm	Lower arm	Upper arm	Lower arm	Upper arm	Lower arm		Upper arm	Lower arm
72				ND 8504	ND 8504	1004	7306MRC	ND 8506	
203	ND 8505	ND 8505			6305	305R	1025	7307MRC	6207SKF
204	ND 8505	ND 8505			6305	305R	1254	7309MRC	6208SKF
224-5	6306	6306	6306	6306	6306	306R	1284	7310MRC	6308SKF
254	6307	6307	6307	6307	6307	307R	1626	7311MRC	6310SKF
284	6308	6308	6308	6308	308R	6308	1665	7312MRC	6312SKF
324-6	6310	6310	6310	6310	310R	6310	2005	7414MRC	6314SKF
364-5	6313	6313	6313	6310	310R	6313	2045	7416MRC	6315SKF
405	6310	6314	6314	6314	310R	6314	2405	7418MRC	6316SKF
445	6313	6315	6315	6315	6313	6313			
505	6314	6316	6317	6317	6314	6314			
585	6322	6318	7318	6318					
684	6326X	6322	7334	6220					
804	6330X	6326X	7340	6220					

Frame	Types QZV-QOZV				Types QZCV-QZVX		Types WZKU-WZU		Type WZV	
	1800 rpm & slower		3600 rpm							
	Upper arm	Lower arm	Upper arm	Lower arm	Upper arm	Lower arm	Upper arm	Lower arm	Upper arm	Lower arm
203	6206	7306	6206	7306			ND 8505	ND 8505		
204	6206	7306	6206	7306			ND 8505	ND8505		
224-5	6207	7307	6207	7307	6306	7306	6306	6305	6207	7307
254	6208	7308	6208	7308	6307	7307	6306	6307	6208	7308
284	7309	6308	30310ND	6308	6308	7308			6209	7309
324-6	7410	6310	30310ND	6310	6310	7310				
364-5	7412	6312	30410ND	6310	6313	7313				
404-5	7413	6313			6314	7314				
444-5	7416	6316			6315	7315				
504-5	7418	6316			6317	7317				
585	7322	6318			(1) 7332	6220				
684	7326	6322			(1) 7334	6220				
804	7340	6238X			(1) 7340	6220				
111	7340	6238X								

(1) TYPE QZCV ONLY

Bearings of the 6200 and 6300 series are SKF. Bearings of the 8500 and 30000 series having prefix or suffix ND are New Departure. Bearings having the suffix R or MRC are Marlin-Rockwell. Bearings shown as 7300 and 7400 are MRC. Bearings of other manufacturers can be used if of equivalent size and type. Any Bearings purchased locally should be specified as “Electric Motor Grade.”

CAUTION: Due to refinements in design, bearings may have been changed from time to time. When ordering bearings from Fairbanks, Morse & Co., the motor serial number must be given to insure the correct bearing size and type being supplied.

BEARING INFORMATION—CONTINUED

ROLLING BEARINGS FOR F-M MOTORS
AC INDUCTION

Frame	Type KZK			Types KZE-KZC			Types KZEX-KZCX		
	Free end	Pulley end		Free end	Pulley end		Free end	Pulley end	
		Belted	Dir. Con.		Belted	Dir. Con.		Belted	Dir. Con.
182-4	ND 8505	ND 8505		ND 8505	ND 8505		SKF8205	SKF6205	
213-5	SKF6306RS	SKF6306RS		SKF6306	SKF6306		SKF6306	SKF6306	
254-6	SKF6308RS	SKF6308RS		SKF6308	SKF6308		SKF6308	SKF6308	
284-6	SKF6310RS	SKF6310RS		SKF6310	SKF6310		SKF6310	SKF6310	
324-6	SKF6312RS	SKF6312RS	SKF6312RS	SKF6312	SKF6312	SKF6312	SKF6312	SKF6312	SKF6312
364-5	SKF6312	SKF6314	SKF6312	SKF6312	SKF6314	SKF6312	SKF6312	SKF6314	SKF6312
404-5	SKF6312	SKF6315	SKF6312	SKF6312	SKF6315	SKF6312	SKF6312	SKF6315	SKF6312
444-5	SKF6314	SKF6317	SKF6314	SKF6314	SKF6317	SKF6314	SKF6314	SKF6317	SKF6314

Frame	Type KZKU-1		Type KZKU-2		Type KZKU-3		Type KZKV-2		Type KZKV-3	
	Normal thrust		Medium thrust		High thrust		Medium thrust		High thrust	
	Upper bearing	Lower bearing	Upper bearing	Lower bearing	Upper bearing	Lower bearing	Upper bearing	Lower bearing	Upper bearing	Lower bearing
184	B07205	B05305								
215	B05306	B05306							A31309	B05207
256	B05308	B05308	B05308	A31308	A31311	B05308	A01311	B05308	A31311	B05308
286	B05310	B05310	B05310	A31310	A32216	B05310	A31311	A01310	A32216	B05310
326	B05312	B05312	B05312	A31312	A32218	B05312	A31312	A01312	A32218	B05312
365	A01312	B05312	A01312	A31312	A32220	B05312	A31312	A01312	A32220	B05312
405	A01312	A01312	A01312	A31312	A32320	A01215	A31314	A01215	A32320	A01215
445	A01314	A01314	A01314	A31314	A32322	A01217	A31315	A01217	A32322	A01217

Frame	Types (1) QZK-QZE (2) QOZK-QFZK		Types (1) O-QS-QO QF-QL-QR		Types (1) QZC QOZX	Types (1) QZX QOZX	Types W-WZS		Types (1) QV-QH QVZE-QHZE	
	Free end	Pulley end	Free end	Pulley end	Both ends	Both ends	Free end	Pulley end	Free end	Pulley end
72	ND 8504	ND 8504	ND 8504	ND 8504						
84			ND 8505	ND 8505			ND 8505	ND 8505		
203	ND 8505	ND 8505	ND 8505	ND 8505		ND 8505	ND 8505	ND 8505		
204	ND 8505	ND 8505	SKF6305	SKF6305		ND 8505	SKF6304	SKF6305		
224-5	SKF6306	SKF6306	SKF6306	SKF6306	SKF6306	SKF6306	SKF6305	SKF6306	SKF6306	SKF6306
254	SKF6307	SKF6307	SKF6307	SKF6307	SKF6307	SKF6307	SKF6306	SKF6307	SKF6306	SKF6307
284	SKF6308	SKF6308	SKF6308	SKF6308	SKF6308	SKF6308	SKF6307	SKF6308	SKF6308	SKF6308
324-6	SKF6310	SKF6310	SKF6310	SKF6310	SKF6310	SKF6310			SKF6308	SKF6310
364-5	SKF6313	SKF6313	SKF6310	SKF6313	SKF6313	SKF6313			SKF6313	SKF6313
364S-5S	SKF6310	SKF6310	SKF6310	SKF6310	SKF6313	SKF6313				
404-5	SKF6314	SKF6314	SKF6310	SKF6314	SKF6314	SKF6314			SKF6313	SKF6314
404S-5S	SKF6310	SKF6310	SKF6310	SKF6310	SKF6314	SKF6314				
444-5	SKF6315	SKF6315	SKF6313	SKF6315	SKF6315	SKF6315			SKF6313	SKF6315
444S-5S	SKF6313	SKF6313	SKF6313	SKF6313	SKF6315	SKF6315			SKF6313	SKF6313
504-5	SKF6317	SKF6317	SKF6314	SKF6317	SKF6317	SKF6317			SKF6314	SKF6317
504S-5S	SKF6314	SKF6314	SKF6314	SKF6314	SKF6317	SKF6317			SKF6314	SKF6314
584-5	SKF6318	SKF6318			SKF6318	SKF6318				
584S-5S	SKF6315	SKF6315			SKF6318	SKF6318				
684-6	SKF6322	SKF6322			SKF6322					
684S-6S	SKF6318	SKF6318			SKF6322					
804-6	SKF6324	SKF6324			SKF6324					
804S-6S	SKF6321	SKF6321			SKF6324					
1084-5			SKF6314	SKF6318	SKF6318				SKF6314	SKF6318
1084S-5S			SKF6314	SKF6314	SKF6318				SKF6314	SKF6314

(1) The frame size designation determines the size of bearing used for both the Q, QV and QZK lines of motors. All electrical and mechanical modifications of these types will use the same bearings as listed for types Q, QV and QZK, when built in the same frame size.

(2) Previous to Sept. 21,1942, SKF 2300 series self-aligning bearings were used. Subsequently all the bearings have been changed to deep-groove, ball bearings SKF6300 series of same bore and outside diameter. The SKF2300 series are wider, but can be replaced with SKF6300 series by using spacers.

NOTE: Bearings are listed with prefixes ND (New Departure), SKF (SKF Industries), for convenience only. Bearings of other manufacturers can be used if of equivalent size and type. Any bearings purchased locally should be specified as “Electric Motor Grade.” Bearings listed with prefixes A or B are only available from Fairbanks, Morse & Co., Freeport, Illinois.

EASA Technical Manual © 1996-2012, Electrical Apparatus Service Association, Inc.

FRANKLIN ELECTRIC CO.

DATE CODES

Date coding consists of two letters, or a letter and numbers. The month is indicated first, then the year. Example: AT means January 1960; A86 means January 1986.

A—January	A —1945	P—1957	9—1969	81—1981
B—February	B —1946	R—1958	70—1970	82—1982
C—March	C —1947	S—1959	71—1971	83—1983
D—April	D —1948	T—1960	72—1972	84—1984
E—May	E —1949	U—1961	73—1973	85—1985
F—June	F —1950	2—1962	74—1974	86—1986
G—July	G —1951	3—1963	75—1975	87—1987
H—August	H —1952	4—1964	76—1976	88—1988
J—September	K —1953	5—1965	77—1977	89—1989
K—October	L — 1954	6—1966	78—1978	90—1990
L—November	M—1955	7—1967	79—1979	
M—December	N —1956	8—1968	80—1980	

TYPE DESIGNATIONS

The type code appears as part of the model number. The old system used letters preceding the model number for type designation.

S - Split phase
C - Capacitor
CP - Permanent split capacitor
3P - Three phase
2P - Two phase

The present system is a 10-digit model number with the second and third digits indicating type.

2nd Digit

1 - Capacitor start, induction run
2 - Capacitor start, capacitor run
3 - Polyphase
4 - Split phase
5 - Permanent split capacitor

3rd Digit

0 - Dripproof
1 - Totally-enclosed, fan-cooled
2 - Totally-enclosed, non-ventilated
3 - Totally-enclosed, air over

BEARING INFORMATION

Frame	Front end bearing	Back end bearing
36 &42	6200	6200
48 & 56	6203	6203
180	77505	77504
180T	77507	77505
210	77507	77505
210T	77508	77507

G. BAUKNECHT

(Now Loher Drive Systems)

BEARING INFORMATION

Frame	Poles	Drive bearing	Non-drive bearing
56	2 & 4	6200-2Z	6200-2Z
63	2 - 8	6201-2Z	6201-2Z
71	2 - 8	6202-2Z	6202-2Z
80	2 - 8	6204-2ZC3	6204-2ZC3
90	2 - 8	6205-2ZC3	6205-2ZC3
100	2 - 8	6206-2ZC3	6206-2ZC3
112	2 - 8	6206-2ZC3	6206-2ZC3
132	2 - 8	6208-2ZC3	6208-2ZC3
160	2 - 8	6309-2ZC3	6309-2ZC3
180	2 - 8	6212-2ZC3	6212-2ZC3
200	2 - 8	6212-2ZC3	6212-2ZC3
225	2 - 8	6313C3	6313C3
250	2 - 8	6314C3	6313C3
280	2	6217C3	6217C3
280	4 - 8	NU217C3	6217C3
315	2	6219C3	6219C3
315	4 - 8	NU219C3	6219C3
355	2 (Foot mtd.)	6316C3	6316C3
355	2 (Vertical)	6316C3	7316B
355	4 - 8 (Foot mtd.)	NU320C3	6316C3
355	4 - 8 (Vertical)	NU320C3	7316B

EASA Technical Manual © 1996-2012, Electrical Apparatus Service Association, Inc.

GALIS DIV., FMC CORP.

(Out of business)

DATE CODES

Manufacturing was taken over by Galis in 1963, and through June 1965, the first two digits of the serial number indicated the year of manufacture. From June 1965 on, date coding followed the frame number in AC motor serial numbers and the model number in DC motor serial numbers. In AC motors the sequence is frame size, year code, month code; for DC motors the sequence is model number, month code, year code. Year codes are the last digit of the year of manufacture (e.g., "3" for 1973). Month codes are 1 through 12. DC motors manufactured for National Mine Service Corp. do not have date codes.

TYPE DESIGNATIONS

TYPE	DESCRIPTION
NAS	Open dripproof
NES	Totally-enclosed non-ventilated
NCS	Totally-enclosed, fan-cooled
NXS	Explosion-proof (Underwriters)
NCPS	Explosion-proof (Buerau of Mines)

BEARING INFORMATION

1200 AND 1800 RPM–STANDARD MOTORS

Frame	Drive (rear)	Front end
182 and 184	205 ball 3505 cartridge MR205E roller	205 ball 3505 cartridge
213 and 215	207 ball 3507 cartridge MR207E roller	205 ball 3505 cartridge
254 and 256	308 ball 3608 cartridge MR308E roller	207 ball 3507 cartridge
284 and 286	310 ball 3610 cartridge MR310E roller	308 ball 3608 cartridge
324 and 326	312 ball 3612 cartridge MR312# roller	310 ball 3610 cartridge
364 and 365	313 ball 3613 cartridge MR313E roller	211 ball 3511 cartridge
404 and 405	314 ball 3614 cartridge MR314E roller	212 ball 3512 cartridge
444 and 445	217 ball 3517 cartridge MR217E roller	212 ball 3512 cartridge

GEC ELECTROMOTORS

(Became Electrodrives, Ltd.; now Brook Crompton Blackheath)

BEARING INFORMATION

Frame	Drive end	Non-drive end
D143-5T	62052Z	62052Z
D182-4T	62062Z	62062Z
D213-5T	62082Z	62082Z
D254-6T	6309Z	6209Z
D284-6T & TS	6310Z	6209Z
D324-6T & TS	6312	6310
D364-5TS	6312	6312
D364-5T	6313	6312
D404-5T & TS	N216	6313

ENCLOSED MOTORS

Frame	Poles	Drive bearing	Non-drive bearing
D250	2	RRM 065	BRM 060
D250	4 - 8	RRM 075	BRM 060
D280	2 - 8	RRM 085	BRM 070
D315 (Horiz.)	2	RRM 085	BRM 085
D315 (Vert.)	2	RRM 085	BRM 070
D315 (Horiz.)	4 - 8	RRM 090	BRM 085
D315 (Vert.)	4 - 8	RRM 090	BRM 100

EASA Technical Manual © 1996-2012, Electrical Apparatus Service Association, Inc.

BEARING INFORMATION—CONTINUED

ALUMINUM FRAME (ALPAK) MOTORS

Frame	Poles	Drive bearing	Non-drive bearing
D63	All	6003Z	6003Z
D71	All	6003Z	6003Z
D80	All	6204Z	6204Z
D90	All	6205Z	6205Z
D100L	All	6206Z	6206Z
D112M	All	6206Z	6206Z
D132	All	6208Z	6208Z
D160	All	6309Z	6209Z
D180	All	6310Z	6209Z
D200L	2	6312	6312
D200L	4 - 8	6312	6310
D225S	All	6313	6312
D225M	2	6312	6312
D225M	4 - 8	6313	6312
D250	All	N315	6312

CAST IRON (CIPAK) MOTORS

Frame	Poles	Drive bearing	Non-drive bearing
D80	All	62042Z	62042Z
D90	All	62052Z	62052Z
D100	All	62062Z	62062Z
D112	All	62062Z	62062Z
D132	All	62082Z	62082Z
D160	All	6309Z	6209Z
D180	All	6310Z	6209Z
D200	All	6312	6312
D225S	All	6313	6312
D225M	2	6312	6312
D225M	4 - 8	6313	6312
D250S	2	6313	6313
D250S	4 - 8	N216	6313
D250M	2	6313	6313
D250M	4 - 8	N315	6313
D280	2	6314	6314
D280	4 - 8	N317	6314
D315	2	6314	6314
D315	4 - 8	N317	6314

EASA Technical Manual © 1996-2012, Electrical Apparatus Service Association, Inc.

BEARING INFORMATION—CONTINUED

TYPE C—HORIZONTAL ENCLOSED MOTORS

Frame	Poles	Drive bearing	Non-drive bearing
C250	2	RRM 070	BRM 060
C250	4 - 8	RRM 080	BRM 070
C280	2	RRM 080	BRM 080
C280	4 - 8	RRM 090	BRM 080
C315	2	RRM 085	BRM 085
C315	4 - 8	RRM 095	BRM 085

TYPE D—HORIZONTAL ENCLOSED MOTORS

Frame	Poles	Drive bearing	Non-drive bearing
D450	4 - 8	RRM 110	BRM 110

HORIZONTAL FOOT MOUNTED

Frame	Poles	Drive bearing	Non-drive bearing
D250	2 - 8	N315	6312
D280	2 - 8	N317	6314
D315	2	N317	6317
D315	4 - 8	N318	6317
D355	2	REFER TO GEC	REFER TO GEC
D355	4 - 8	N324	6324
D450	2	REFER TO GEC	REFER TO GEC
D450	4 - 8	N322	6322

VERTICAL FLANGE MOUNTED

		Drive bearing	Non-drive bearing		
Frame	Poles	Deep groove	Standard	Duplex deep groove	Special
D250	2	N315	6312	QJ312M	——
D250	4 - 8	N315	6312	QJ312M	6319
D280	2	N317	6314	370CDV	——
D280	4 - 8	N317	6314	395CD	6319
D315	2	N317	6317	370CDV	——
D315	4 - 8	N318	6317	395CD	6319
D355	2	REFER TO GEC	REFER TO GEC	REFER TO GEC	——
D355	4	N324	6324	400CDV	——
D355LA	6	N324	6324	QJ320M	——
D355LA	8	N324	6324	420CDV	——
D355LB, LC	6 - 8	N324	6324	420CDV	——

EASA Technical Manual © 1996-2012, Electrical Apparatus Service Association, Inc.

BEARING INFORMATION—CONTINUED

SLIP-RING MOTORS

Frame	Drive bearing	Non-drive bearing
DW250	RRM 075	BRM 060
DW280	RRM 085	BRM 070
DW315	RRM 090	BRM 085

DC MOTORS

Frame	Drive bearing	Non-drive bearing
MD71	6203ZZ	6201ZZ
MD90	6205ZZ	6202ZZ
MD112	6206ZZ	6203ZZ
MD132	6208ZZ	6204ZZ
SD132	6208Z	6208Z
SD160	6310	6308
SD200	6314	6309
SD250	6316	6312
SD280	6317	6312
SD315	ROLLER N320	6317

EASA Technical Manual © 1996-2012, Electrical Apparatus Service Association, Inc.

GENERAL ELECTRIC CO.
GENERAL ELECTRIC (CANADA), MOTOR DIV.

DATE CODES

Beginning in 1944, letters were used to date-code equipment. The month code preceded the year code. From 1944 through 1964, the following system was used.

N	January	A	1944	N	1956
O	February	B	1945	P	1957
P	March	C	1946	R	1958
R	April	D	1947	S	1959
S	May	E	1948	T	1960
T	June	F	1949	V	1961
U	July	G	1950	W	1962
V	August	H	1951	X	1963
W	September	J	1952	Y	1964
X	October	K	1953		
Y	November	L	1954		
Z	December	M	1955		

The following code was used from 1965 to 1985

A	January	A	1965	N	1977
B	February	B	1966	P	1978
C	March	C	1967	R	1979
D	April	D	1968	S	1980
E	May	E	1969	T	1981
F	June	F	1970	V	1982
G	July	G	1971	U	1982 (DC motors)
H	August	H	1972	W	1983
J	September	J	1973	X	1984
K	October	K	1974	Y	1985
L	November	L	1975		
M	December	M	1976		

Starting in 1986, the date code letters for the month are the same as those shown for 1944-1964. The year designations are:

1986	A	1989	D	1992	G	1995	K
1987	B	1990	E	1993	H		
1988	C	1991	F	1994	J		

TYPE DESIGNATIONS

Model number nomenclature:

5	K	213	A	N	101	A	E
1	2	3	4	5	6	7	8

1. Number "5" is used to distinguish motors and generators from other products having the same type letters.
2. Electrical type letters:

Polyphase motors

K	Normal starting torque–normal efficiency–NEMA Design A & B
KAF	For use with adjustable-frequency power supply
KE	Mechanical elevator
KF	Rivited frame
KG	High starting torque–NEMA Design C
KL	Hydraulic elevator
KOF	Oil well pumping
KR	High slip–NEMA Design D
KXA	For use with adjustable-voltage power supply
KY	Special characteristics
SK	Synchronous reluctance (OBSOLETE)
SR	Synchronous (OBSOLETE)
KS	Normal starting torque–Energy Saver line–NEMA Design A & B
KGS	High starting torque–Energy Saver line–NEMA Design C
kW	Normal starting torque–high efficiency–NEMA Design A & B
KOW	Triple Horsepower, 5 to 8% slip, NEMA D, oil well pumping

EASA Technical Manual © 1996-2012, Electrical Apparatus Service Association, Inc.

TYPE DESIGNATIONS—CONTINUED

Single-phase motors

KC	Capacitor start and capacitor start/capacitor run–NEMA Design L, M
KCJ	Capacitor start with high torque (OBSOLETE)
KCY	Special capacitor start (OBSOLETE)
KCR	Capacitor start, capacitor run
KCS	Capacitor start, split phase
KCP	Permanent split capacitor
KH	Split phase
KSP	Shaded pole

Polyphase wound-rotor motors

M	Normal torque
MJ	Selsyn
MM	Frequency converter
MR	Crane

DC motors

CD	Industrial shunt motor
BPA, BPB	Permanent magnet
BCG, JB	Series motor
BT	Battery truck

3. FRAME NUMBERS: For intergral hp frames except some vertical pump motors
4. Denotes the construction due to enclosure/application.

The following take precedent over any other letter for all enclosures, except explosion-proof, with footed or round frame:

M	Marine motors
N	Navy motors
P	Partial motors
T	Textile motors
S	Severe duty motors
L	Severe duty motors–high efficiency (only used between 1977 and 1979)

The following are used for enclosures:

Type	Dripproof or WPI	TEFC or TEWAC	TENV or TEAO	Explo-sion-proof	WPII
Footed Frame	A	B (Note 1)	H (Note 1)	C	E
Round Frame	D	F (Note 1)	W (Note 1)	G	E
All Others (Note 2)	J	K (Note 1)	K (Note 1)	R	E

Note 1: Use “S” for Severe duty
Note 2: Example = C-face with footed frame

5. Denotes the general design.

Active as of 1/92

C	1985	Cast iron frame–built at TECO
D	1986	Rolled steel frame–built at HIMCO
E	1986	Cast Iron Frame–Built at HIMCO
L	1965	Aluminum frame
N	1965	Cast iron frame–500 frame except P-base vertical–non-CIR
P	1975	P-base vertical aluminum frame
S	1981	Cast iron frame–CIR
T	1981	P-base vertical cast iron frame includes 500 frame P-base vertical

Obsolete as of 1/92

F	1986	Rolled steel frame for HIMCO (not GE) use only
G	1986	Cast iron frame for HIMCO (not GE) use only
H	1989	140 frame rolled steel–sourced from Reliance
J	1959	180 frame Thinline
K	1965	Cast iron frame (SMP)
M	1965	Cast iron frame (San Jose only)
N	1965	Cast iron frame (pre CIR), 180 frame at WMP & NMP, 210-449 frame at NMP and OMP
Q	1989	Cast iron frame sourced from GEC in England
R	1975	P-base vertical cast iron frame
V	1985	Rolled steel frame, 180 frame (NMP)
W	1980	Rolled steel frame, 180 frame (Fort Wayne, Design R) (WMP)
X	1985	Aluminum frame, 180 frame (Fort Wayne, Design L and S) (NMP)

TYPE DESIGNATIONS—CONTINUED

6. FORM NUMBERS: Denotes specific modification by design and are sequentially assigned from the following blocks of numbers by pole.

   The following are used with all Second Form Letters (except P and T):

2 pole	4 pole	6 pole	8 pole
101 - 199	201 - 299	301 - 399	401 - 499
1001 - 1999	2001 - 2999	3001 - 3999	4001 - 4999

10 pole	12 pole	14 pole	16 pole
501 - 599	601 - 699	701 - 799	801 - 899

Multispeed
901 - 999

The following form numbers are reserved for standard models with all second form letters (except P and T) and standard voltages and shaft extensions.

Form number	Volts	Shaft type	Shaft type
104, 204, 304, 404	575	T	LL
114, 214, 314, 414	575	TS	LS
105, 205, 305, 405	230/460	T	LL
115, 215, 315, 415	230/460	TS	LS
106, 206, 306, 406	200	T	LL
116, 216, 316, 416	200	TS	LS
108, 208, 308, 408	460 Only	T	LL
118, 218, 318, 418	460 Only	TS	LS

7. FIRST SUFFIX CHARACTERS: Denote an interchangeable design change of the complete motor. Characters “A” through “D” and “D1” through “D99” are used sequentially when required.

8. SECOND SUFFIX CHARACTERS: These denote special items or overload protective devices. Second suffix characters are used in place of first suffix characters when the first characters are not required. The following are used for special items:

C1 or C2 Ceiling mounting per NEMA MG1-4.03
E Special varnish treatment
F2 Floor Mounting per NEMA MG1-4.03
G Conversion of Energy Saver (“KS” in model number)
To standard efficiency motor (“K” in model number)
H Precision balance
HA Addition of 115-volt cartridge heater kit to vertical motor
HB Stator with magnetic wedge
K Stearns brake
L Special balance
N Dings brake
Q Addition of grease fittings to standard motor

EASA Technical Manual © 1996-2012, Electrical Apparatus Service Association, Inc.

BEARING INFORMATION

STANDARD TRI-CLAD 700 MOTORS

Frame	Aluminum frame		Cast iron frame	
	Drive end	Opposite drive end	Drive end	Opposite drive end
210T	40BC02XP	25BC02XP	40BC02XP	30BC02XP
250T	45BC03XP	35BC02XP	45BC03	35BC02
280TS	50BC03JP	35BC02JP	50BC03	35BC02
280TS(XP)	50BC03JP	35BC02JP	50BC03	40BC03
280T	50BC03JP	35BC02JP	50BC03	35BC02
280T(XP)	50BC03JP	35BC02JP	50BC03	40BC03
320TS(DP)	60BC03	50BC02	50BC03	50BC03
320TS	60BC03	50BC02	60BC03	50BC03
320T	60BC03	50BC02	60BC03	50BC03
360TS	65BC02J3	65BC02J3	60BC03	60BC03
360T	70BC03J3	65BC02J3	70BC03	60BC03
400TS	65BC02J3	65BC02J3	60BC03	60BC03
400T	80BC03J3	65BC02J3	80BC03	60BC03
440TS	70BC03J3	70BC03J3	70BC03	70BC03
440T	90BC03J3	70BC03J3	90BL03	70BC03
444T (only)			90BC03	70BC03

EASA Technical Manual © 1996-2012, Electrical Apparatus Service Association, Inc.

HOWELL ELECTRIC MOTORS

DATE CODES

HOWELL, MICHIGAN PLANT

Type designations are combinations of letters from electrical and mechanical types.

Electrical Types

SC	Polyphase - NEMA Design A
N	Polyphase - NEMA Design B
H	Polyphase - NEMA Design C
F	Polyphase - NEMA Design D
J	Dual voltage - part winding start - low voltage
I	Single Voltage - part winding start
M	Polyphase - multispeed
HE	Polyphase - hydraulic elevator
SCE	Polyphase - elevator
G	Torque motor
SR	Polyphase - wound rotor
X	Polyphase - hoist
Z	Polyphase - special
CI	Single phase - capacitor start

Mechanical Types

O	Open, Dripproof
K	Totally-enclosed, fan-cooled
T	Totally-enclosed, non-ventilated
YD	Explosion-proof, Class I, Groups C and D
YG	Explosion-proof, Class II, Groups E, F and G
R	Splash-proof
W	Weather protected
A	Suffix - auxiliary ventilated
B	Suffix - encapsulated winding
DG	Sanitary

PLAINFIELD, NEW JERSEY PLANT

(Formerly Kingston - Conley)

Motor numbers are two numbers designating mechanical specifications, a letter and number designating electrical type, mounting and modifications, four numbers designating electrical specification and another number for mechanical modification.

Example: 38J130021

38	Open, ball bearing
J1	Capacitor start, rigid base, first modifications
3002	Electrical winding specification
1	Mechanical modification

Mechanical Specifications

Model No.

37 Open, ball bearing with a rigid base and a NEMA C fractional face mounting.
38 Open, ball bearing motor.
39 Open, sleeve bearing.
40 TENV, ball bearing.
41 TENV, sleeve bearing.
42 TEFC, ball bearing with rigid base.
43 Jet pump, open ball bearing, round body, NEMA C fractional face mounting.
45 Shaft mounted fan duty, TENV, sleeve bearing, resilient or thrubolt mount.
46 Shaft mounted fan duty, TENV, ball bearing resilient or thrubolt mount.
47 TENV, ball bearing, with rigid base, and NEMA C fractional face mounting.
48 TEFC, ball bearing, with rigid base, and NEMA C fractional face mounting.
49 Pump motor, open, ball bearing, round body, NEMA C face mounting. Features over-sized bearings.
50 Jet pump duty, TENV ball bearing, round body with NEMA C face mounting.
51 NEMA 180 Series, open, ball bearing.
52 NEMA 180 Series, TENV, ball bearing.
53 Face mounted, NEMA 180 Series, open, ball bearing round body, NEMA C face.
54 Face mounted, TENV, NEMA 180 Series, ball bearing, round body, NEMA C face.
55 NEMA 180 Series, TEFC, ball bearing, rigid.
56 NEMA 180 Series, open, sleeve bearing.
57 NEMA 180 Series, TENV, sleeve bearing.
58 Face mounted, TEFC, NEMA 180 Series, ball bearing.
60 Grinder Lines, TENV, ball bearing.
61 NEMA 210 Series, dripproof, ball bearing, rigid.
63 Face mounted, NEMA 210 Series, ball bearing, NEMA C face.
70 NEMA 48 Series, dripproof ball bearing motor with rigid or resilient base.
71 NEMA 48 Series, dripproof, sleeve bearing.
72 NEMA 48 Series, TENV, ball bearing with rigid or resilient base.
73 NEMA 48 Series, TENV, sleeve bearing with rigid or resilient base.
74 TEFC, ball bearing with rigid base.
75 NEMA 48 Series, dripproof, ball bearing with a rigid base and a NEMA C fractional face mounting.

EASA Technical Manual © 1996-2012, Electrical Apparatus Service Association, Inc.

DATE CODES—CONTINUED

Electrical Type and Mounting

Part	
A	Three phase, rigid base
B	Three phase, resilient base
C	Three phase, face mounted
D	Three phase, round body
E	Split phase, rigid base
F	Split phase, resilient base
G	Split phase, face mounted
H	Split phase, round body
J	Capacitor start, rigid base
K	Capacitor start, resilient base
L	Capacitor start, face mounted
M	Capacitor start, round body
N	Capacitor start, rigid base, automatic thermal
P	Capacitor start, resilient base, automatic thermal
S	Capacitor start, face mounted, automatic thermal
T	Capacitor start, round body, automatic thermal
V	Capacitor start, rigid base, manual thermal
W	Capacitor start, resilient base, manual thermal
X	Capacitor start, face mounted, manual thermal
Y	Capacitor start, round body, manual thermal
Z	Used for all motors not falling within a standard descriptive category.
AA	Split phase, rigid base, automatic thermal

Part	
AB	Split phase, rigid base, manual thermal
AC	Split phase, resilient base, automatic thermal
AD	Split phase, resilient base, manual thermal
AE	Split phase, face mounted automatic thermal
AF	Split phase, face mounted, manual thermal
AG	Split phase, round body, automatic thermal
AH	Split phase, round body, manual thermal
AJ	Three phase, rigid base, automatic thermal
AK	Three phase, resilient base, automatic thermal
AL	Three phase, face mounted, automatic thermal
AM	Three phase, round body, automatic thermal
AT	Three phase, face mounted, manual thermal
AV	Three phase, round body, manual thermal
MP	Motor parts and partial motors–capacitor start, ball bearings
MPS	Motor parts and partial motors–capacitor start, ball bearing, auto thermal.
MPV	Motor parts and partial motors–capacitor start, ball bearing, manual thermal.
MPH	Motor parts and partial motors–split phase, ball bearing
PM	Motor parts, three phase, ball bearing

BEARING INFORMATION

BALL BEARING DATA FOR STANDARD HORIZONTAL MOTORS
HOWELL, MICHIGAN PLANT

Frame size	Type	Bearing number	
		Front	Back
A-141-7 A-561-7	Open - SC Closed - T	87503	87503
A-171-5 A-66	Open - SC Closed - T	87504	87504
A-203-A-204 203-204	Open - SC - R Closed - T Class I Group D - E	305	305
A-224-A-225 224-225	Open - SC - R Closed - T - K Class I Group D - EK	306	306
A-254 254	Open - SC - R Closed - T - K Class I Group D - EK	307	307
A-284 284	Open - SC - N - R Closed - T - K Class I Group D - EK	308	308
A-324-A-326 324-326	Open - SC - N - R Closed - T - K Class I Group D - EK	310	310
364-365	Open - SC - N - R Closed - T - K Class I Group D - EK	312	312
404-405	Open - SC - N - R Closed - T - K Class I Group D - EK	312	312
444-445	Open - SC -N Closed - K Splash-proof- R	314 313 313	314 313 313
504-505	Open - SC -N Closed - K Splash-proof- R	317 316 316	317 316 316
584-585 586	Open - SC - N Closed - K SPLASHPOOF - R	319	319
684-685 686	Open - SC - N Closed- K Splash-proof- R	320	320

EASA Technical Manual © 1996-2012, Electrical Apparatus Service Association, Inc.

IDEAL ELECTRIC & MFG. CO.

DATE CODES

Year	From	To
1950	169300	177425
1951	174426	183913
1952	183914	190179
1953	190180	195000
1954	195001	200625
1955	200626	208000
1956	208001	215030
1957	215031	220800
1958	220801	225504
1959	225505	230639
1960	230640	236050
1961	236051	240000
1962	240001	244000
1963	244001	248900
1964	248901	252675
1965	252676	258250
1966	258251	264632
1967	264633	268950
1968	268951	273295
1969	273296	276560

Year	From	To
1970	276561	280150
1971	280151	283649
1972	283650	287366
1973	287367	291464
1974	291465	295584
1975	295585	298681
1976	298682	301715
1977	301716	304755
1978	304756	308297
1979	308298	312279
1980	312280	316597
1981	316598	320441
1982	320442	323690
1983	323691	327029
1984	327030	330250
1985	330251	333292
1986	333293	337389
1987	337390	341861
1988	341862	345987
1989	345988	350964

From 1990 to the present, the first two numbers of the S.O. numbers begin with the current year (e.g., 1990–905555).

IMPERIAL ELECTRIC CO.

TYPE DESIGNATIONS

D DC hoist motor
E AC elevator hoist and hydro motors
E/D Motor generator sets

BEARING INFORMATION

AC ELEVATOR HOIST & HYBRID MOTORS–TYPE E

Frame	Shaft end	Opposite shaft end
213/215	40BC02 JPP3M	25BC02 JPP3M
254/6	45BC02 JPP3M	45BC02 JPP3M
284/6	55BC03 JPP3M	45BC02 JPP3M
324/6	55BC03 JPP3M	45BC02 JPP3M
364/5	65BC03 JPP3M	45BC02 JPP3M
404/5	90BC02 JPP3M	65BC02 JPP3M
444/5	90BC02 JPP3M	65BC02 JPP3M

DC HOIST MOTOR–TYPE D

Frame	Shaft end	Opposite shaft end
284/8	55BC03 JPP3M	45BC02 JPP3M
324/8	55BC03 JPP3M	45BC02 JPP3M
366/8	65BC03 JPP3M	45BCO2 JPP3M
407/9	90BC02 JPP3M	65BCO2 JPP3M

MOTOR GENERATOR SETS–TYPE E/D

kW	Frame	Motor	Generator
7.5	284/280	35BC02 JPP3M	45BC02 JPP3M
10	286/280	35BC02 JPP3M	45BC02 JPP3M
12.5	286/280	35BC02 JPP3M	45BC02 JPP3M
15	324/320	45BC02 JPP3M	45BC02 JPP3M
20	326/320	45BC02 JPP3M	45BC02 JPP3M
25	366/360	45BC02 JPP3M	45BC02 JPP3M
30	367/360	45BC02 JPP3M	45BC02 JPP3M
40	368/360	45BC02 JPP3M	45BC02 JPP3M
50	407/360	65BC03 JPP3M	65BC02 JPP3M
60	S409/360	65BC03 JPP3M	65BC02 JPP3M

EASA Technical Manual © 1996-2012, Electrical Apparatus Service Association, Inc.

INTERNATIONAL ELECTRIC CORP./BAYLOR

(Now National Oilwell)

DATE CODES

Letter code for month and year of manufacture. Code letters are prefix to the serial number. Month comes first.

A	January	G	July
B	February	H	August
C	March	I	September
D	April	J	October
E	May	K	November
F	June	L	December

A	1979	H	1986	O	1993	V	2000
B	1980	I	1987	P	1994	W	2001
C	1981	J	1988	Q	1995	X	2002
D	1982	K	1989	R	1996	Y	2003
E	1983	L	1990	S	1997	Z	2004
F	1984	M	1991	T	1998		
G	1985	N	1992	U	1999		

MODEL NUMBER SYSTEM

Typical No. — — — — — — — — — — — — **G** **4** **32** **H** **E** **J** **— 000**

(IEC internal reference)

Generator Series
- E Outboard bearing
- G Commercial
- M Marine (ABS, etc.)
- S SCR duty
- T Totally enclosed

Number of Poles
- 2, 4, 6, 8 = actual number
- 5 = 24 pole, 400 Hz

Frame Size
- 15, 20, 24, 32, 44, 55

Stator Code
- (IEC internal reference)

Winding

A	=	BR 10 leads
B	=	BR 12 leads
C	=	120/208 - 127/220 - 60 Hz
D	=	220/380 - 60 Hz
E	=	277/480 - 60 Hz
F	=	347/600 - 60 Hz
G	=	120/240 - 60 Hz, 1 Phase
H	=	127/220 - 50 Hz
J	=	254/440 - 50 Hz
K	=	
L	=	115/200 - 400 Hz
M	=	1900/3300 - 60 Hz Form
N	=	2400/4160 - 60 Hz Form
P	=	4160/7200 - 60 Hz Form
Q	=	2200/3800 - 50 Hz Form
R	=	13,800 - 60 Hz Form
S	=	Special
T	=	277/480 - 60 Hz Form
U	=	347/600 - 60 Hz Form
V	=	277/480 - 60 Hz 6 lead
W	=	347/600 - 60 Hz 6 lead
X	=	
Y	=	
Z	=	

Mounting Configuration

A	=	#2	Delco #2	High foot
B	=	#1	Delco #1	“ “
C	=	#1/2	Delco #1	“ “
D	=	#2	511 (11.5” o.c.c.)	“ “
E	=	#1	514 (14” o.c.c.)	“ “
F	=	#1/2	514 (14” o.c.c.)	“ “
G	=	#0	Delco #1	Low foot
H	=	#0	514 (14” o.c.c.)	“ “
J	=	#0	518 (18” o.c.c.)	“ “
K	=	#2	Delco #2	“ “
L	=	#1	Delco #1	“ “
M	=	#1/2	Delco #1	“ “
N	=	#2	511 (11.5” o.c.c.)	“ “
P	=	#1	514 (14” o.c.c.)	“ “
Q	=	#1/2	514 (14” o.c.c.)	“ “
R	=			
S	=	Special		
T	=	Two bearing		
U	=			
V	=	No housing		
W	=	#00	521 (21” o.c.c.)	
X	=	#00	524 (24” o.c.c.)	
Y	=	#3	511 (11.5” o.c.c.)	Low foot
Z	=	#3	511 (11.5” o.c.c.)	High foot

KATOLIGHT CORP.

TYPE DESIGNATIONS

Model prefix denotes fuel:
"D" denotes diesel.
"N" denotes natural gas.*
"G" denotes gasoline.*
"L" denotes propane.*
*Optional—any fuel or all three.

First number group denotes kW capacity of generator.

First letter denotes type of generator:

F	Brushless rectifier type, direct connected, revolving field.
H	Revolving armature, self-excited.
I	Induction generator.
X	Static excited, revolving field.
Y	Cranking excited, direct connected.

Second letter denotes revolving armature voltage and phase:

A	115 volt, 1 phase, 2 wire
D	115/230 volt, 1 phase, 4 wire
F	115/230 volt, 1 phase, 3 wire

Revolving field type:

G	120/240 volt, 1 phase
J	120/240 volt, 3 phase
N	600 volt, 3 phase
P	120/208 volt, 3 phase
R	277/480 volt, 3 phase
S	2400/4160 volt, 3 phase

kW
Direct Connected Brushless
Rev. Field, 1 Phase, 115/230 Volt
Wisconsin Engine
1800 rpm
5 F G W 4

kW
Self Excited
Rev. Armature, 1 Phase, 115 Volt
Briggs & Stratton Engine
3600 rpm
2 H A B 3

Diesel
kW
Brushless
Rev. Field, 3 Phase, 120/208 Volt
Hercules Engine
1800 rpm
D 50 F P H 4

Natural Gas
kW
Direct Connected Exciter
Rev. Field, 3 Phase, 120/240 Volt
Chrysler Engine
1800 rpm
N 40 M J C 4

Natural Gas
kW
Brushless
3 Phase, 277/480 Volt
Cummins Engine
1800 rpm
D 1000 F R Z 4

EASA Technical Manual © 1996-2012, Electrical Apparatus Service Association, Inc.

TYPE DESIGNATIONS—CONTINUED

Third letter denotes engine manufacture:

A	Catepillar
B	Briggs & Stratton
C	Continental, Chrysler
D	Allis Chalmers
E	Waukesha
F	Ford
G	Climax, Acme
H	Hercules
I	Isuzu
J	John Deere
K	Deutz
L	Lister
M	Minneapolis Moline
N	Lombardini
P	Perkins
Q	Two bearing generator, independent
R	Rolls Royce, Roiline
T	Hatz
U	Murphy
V	Volvo
W	Wisconsin
X	General Motors
Y	Mitsubishi
Z	Cummins

Last number/letter denotes number of poles, rpm and frequency:

3	2 poles, 3600 rpm, 60 cycle
4	4 poles, 1800 rpm, 60 cycle
5	4 poles, 1500 rpm, 50 cycle
6	6 poles, 1200 rpm, 60 cycle
7	2 poles, 3000 rpm, 50 cycle
1	400 cycle

EASA Technical Manual © 1996-2012, Electrical Apparatus Service Association, Inc.

KIRLOSKAR ELECTRIC CO., LTD.

BEARING INFORMATION

IEC MOTORS

Frame	Poles	Drive bearing	Non-drive bearing
80	All	6204	6204
90	All	6205	6205
100	All	6206	6206
112	All	6306	6306
132	All	6308	6308
160	All	6309	6309
180	All	6310	6309
200	All	6312	6310
225	All	6313	6313
250	2	N315C3	6313C3
250	4 & Up	N315	6313
280	2	N318C3	6314C3
280	4 & Up	N318	6314
315	2	N321C3	6318C3
315	4 & Up	N321	6318

NEMA MOTORS

Frame	Drive bearing	Non-drive bearing
143T	6205	6205
145T	6205	6205
182T	6206	6206
184T	6206	6206
213T	6308	6308
215T	6308	6308
254T	6309	6309
256T	6309	6309
284T	6310	6310
284TS	6310	6310
286T	6310	6310
286TS	6310	6310
324T	6312	6212
324TS	6312	6212
326T	6312	6212
326TS	6312	6212
364T	6313	6313
364TS	6313	6313
365T	6313	6312
365TS	6313	6313

EASA Technical Manual © 1996-2012, Electrical Apparatus Service Association, Inc.

LEESON ELECTRIC CORP.

(Part of Regal-Beloit Corp.)

DATE CODES

All Leeson motors have a date code signifying the date of manufacture. This date code is found in different areas of the nameplate depending upon the type of motor. Typically, the nameplate will have a box stamped "Date Code." The code is an alphabetical letter followed by the two digits of the year in which the motor was manufactured. The two numbers are followed by a letter that identifies the plant where the motor was manufactured. The letters identifying the month are as follows:

A	January	C	March	E	May	G	July	I	September	K	November
B	February	D	April	F	June	H	August	J	October	L	December

Example: A99B means January 1999, Black River Falls.

TYPE DESIGNATIONS

Electrical type precedes mechanical type.

Electrical Type

- C Capacitor start
- K Capacitor start–capacitor run
- P Permanent split capacitor
- S Split phase
- T Three phase
- D DC

Mechanical Type

- D Dripproof
- O Open
- F Totally-enclosed fan-cooled
- N Totally-enclosed non-ventilated
- OA Open-air over
- NA Totally-enclosed air over
- X TEFC explosion-proof
- E TENV explosion-poof

Model Number Nomenclature

SMI 3.3.2

EXAMPLE:

SAMPLE MODEL NO.

1	2	3	4	5	6	7	8	9	10
A	B	4	C	17	D	B	1 (1-199)	A (A-Z)	P (Optional)

1. U/L Prefix

- A Auto protector U/L recognized for locked rotor plus run, also recognized constr. (UL1004)*
- M Manual protector U/L recognized for locked rotor plus run, also recognized constr. (UL1004)*
- L Locked rotor protector (automatic) U/L recognized for locked rotor only, also recognized construction (U/L1004)
- C Component recognition (U/L1004) - no protector
- U Auto Protector not U/L recognized
- P Manual protector not U/L recognized
- T Thermostat not U/L recognized
- N No overload protection

* This applies only to 48, S56, and 56 frame designs through 1 hp, Open & TENV.

2. Multi-listing Stock Models

- B Brownell-Electro
- S Steveco
- L Louis Allis

3. Frame

4	-	48	364	-	364T
6	-	56	365	-	365T
143	-	143T	404	-	404T
145	-	145T	405	-	405T
182	-	182T	444	-	444T
184	-	184T	445	-	445T
213	-	213T			
215	-	215T			
254	-	254T			
256	-	256T			
284	-	284T			
286	-	286T			
324	-	324T			

TYPE DESIGNATIONS—CONTINUED

4. Motor Types

C	Cap. start/ind. run
D	Direct current
K	Cap. start/cap. run
P	Permanent split
S	Split phase
T	Three phase

5. RPM

Single Speed

34	3450 rpm 60 Hz 2 pole
28	2850 rpm 50 Hz 2 pole
17	1725 rpm 60 Hz 4 pole
14	1425 rpm 50 Hz 4 pole
11	1140 rpm 60 Hz 6 pole
9	950 rpm 50 Hz 6 pole
8	860 rpm 60 Hz 8 pole
7	700 rpm 50 Hz 8 pole
7	695 rpm 60 Hz 10 pole
6	580 rpm 50 Hz 10 pole
6	580 rpm 60 Hz 12 pole

Multispeed (or other combinations)

24	2 and 4 poles
26	2 and 6 poles
82	2 and 8 poles
212	2 and 12 poles
46	4 and 6 poles
48	4 and 8 poles
410	4 and 10 poles
412	4 and 12 poles
68	6 and 8 poles

Odd frequencies other than 50 Hertz show synchronous speed code.

6. Enclosure

D	Dripproof
E	Explosion-proof TENV
F	Fan-cooled
N	TENV
O	Open
S	Splash-proof
W	Weatherproof, severe duty, chemical duty
X	Explosion-proof TEFC

7. Mounting

B	Rigid base standard
C	C face - No base–NEMA
D	D flange–no base–NEMA
H	48 frame–56 frame mounting/shaft rigid
J	48 frame–56 frame mounting/shaft resilient
K	Rigid mount with C flange
L	Rigid mount with D flange
M	Motor parts–rotor and stator
R	Resilient base
S	Shell motor
Z	Special mounting

8. Sequence Number

Numbers taken out as required when new designs with new characteristics are needed.

9. Modification Letter

Major modification letter. Used when revisions made in existing model will affect service parts.

10. Optional Letter

When shown on nameplate indicates model has U/L primary single phasing recognition. (Applies to three-phase motors only.)

BEARING INFORMATION

Leeson does not have a standard or “rule of thumb” that can be used to associate the bearing sizes with motor frame sizes. Leeson’s Engineering Department determines the bearing size based on the motor’s horsepower, the output shaft, and the motor’s loading requirements.

EASA Technical Manual © 1996-2012, Electrical Apparatus Service Association, Inc.

LELAND FARADAY ELECTRIC CO.

DATE CODES

The date code is two letters with the month preceding the year designation.

Month			
January	A	July	G
February	B	August	H
March	C	September	J
April	D	October	K
May	E	November	L
June	F	December	M

Year			
1975	L	1983	T
1976	M	1984	U
1977	N	1985	V
1978	O	1986	W
1979	P	1987	X
1980	Q	1988	Y
1981	R	1989	Z
1982	S	1990	A

LEROY-SOMER, INC.

(Now U.S. Motors, Nidec Motor Corp.)

DATE CODES

The following date codes are for all motors manufactured in Granby, Canada. Serial numbers begin with the letters “D” through “J”. The first number designates year of manufacture.

9 - 1979	2 - 1982	5 - 1985
0 - 1980	3 - 1983	6 - 1986
1 - 1981	4 - 1984	7 - 1987, etc.

Second letter designates month the motor was manufactured.

A - January	D - April	G - July	K - October
B - February	E - May	H - August	L - November
C - March	F - June	I - September	M - December

Example: D7A10000 = Manufactured January 1987, and the 10,000 motor manufactured during that month.

TYPE DESIGNATIONS

See next page.

EASA Technical Manual © 1996-2012, Electrical Apparatus Service Association, Inc.

Catalog numbers consist of six significant characters which are explained in the chart below.

Example: Cat. No. 2 2 J S 5 D

ENCLOSURE	MOUNTING	HP	FRAME	SPEED	VOLTAGES
TEFC 1.15 and +	C Flange	5	184T (112)	4P W/O Feet	200/230/460V 3Ø

1st Character ENCLOSURE		2nd Character MOUNTING		3rd Character hp		4th Character FRAME		5th Character SPEED		6th Character VOLTAGES	
1	TEFC 1.0	1	Standard	1	1000 and +	O	504	2	2P W/FEET	2	208V 3Ø
2	TEFC 1.15 and +	2	C Flange	2	1000	B	505-506-507 (315)	3	2P W/O FEET	3	230V 3Ø
3	TEAO	3	D Flange	3	900	C	445T (280L)	4	4P W/FEET	4	416V 3Ø
4	TENV	4	JM	4	800	D	444T (280M)	5	4P W/O FEET	5	460V 3Ø
5	ODP	5	JP	5	700	E	405T (250L)	6	6P W/FEET	6	600V 3Ø
6	Trimount	6	WCP / CZ	6	600	F	404T (250M)	7	6P W/O FEET	7	208/230V 3Ø
7	Rep. Inv.	7	hp	7	500	G	365T (225L)	8	8P W/FEET	8	208/230/460V 3Ø 60 Hz
8	Rep. War.	8	VHS SLC	8	450	H	364T (225M)	9	8P W/O FEET	0	Special 3Ø
9	Spare Parts	9	VHS NRR	9	400	J	326T (200L)	0	Special W/FEET	A	208/416V 3Ø
0	Special	A	B3	0	Special	K	324T (200M)	1	Special W/O FEET	B	230/460V 3Ø
A	AGRI TEFC	B	B5	A	1/4	L	286T (180L)	A	2/4 • 1 • WF • VT	C	575V 3Ø
B	AGRI ODP	C	B 35	B	1/3	M	284T (180M)	B	2/4 • 1 • RB • VT	D	200/230/460V 3Ø
C	FCO	D	B14 metric	C	1/2	N	256T (160M)	C	2/4 • 1 • WF • CT	E	575/600V 3Ø
D	Hydro	E	B34	D	3/4	P	254T (160M)	D	2/4 • 1 • RB • CT	F	200/230/460/575/600V 3Ø
E	Submersible	F	V1	E	1	Q	215T (132L)	E	4/8 • 1 • WF • VT	G	220/380V 3Ø 50 Hz
F	Pancake	G	Special Metric	F	1.5	R	213T (132S)	F	4/8 • 1 • RB • VT	H	190/380V 3Ø 50 Hz
G	WR TEFC	H	Integral Mount	G	2	S	184T (112)	G	4/8 • 1 • WF • CT	I	460V 3Ø (Part Wdg. Start)
H	WR ODP		W/Feet	H	3	T	182T (100)	H	4/8 • 1 • RB • CT	J	380/660V 3Ø 50 Hz
I	Integral Mount	J	Integral Mount	I	250	V	145T (90L)	J	4/6 • 2 • WF • VT	K	415/720V 3Ø 50 Hz
	for Econogear		W/Flange	J	5	W	143T (90S)	K	4/6 • 2 • WF • CT	L	240/415V 3Ø 50 Hz
J	WR TENV	K	C Face Adaptor	K	7.5	X	Special	L	4/6 • 2 • RB • VT	M	220/240/380/415V 3Ø
K	EXP		W/Feet	L	10	Y	56 (80)	M	4/6 • 2 • RB • CT		50 Hz
L	WP1	L	C Face Adaptor	M	15	Z	48 (63/71)	N	2/4 • 2 • WF • VT	N	208/415V 3Ø 50 Hz
M	FCM TEFC		W/Flange	N	20			P	2/4 • 2 • RB • VT	P	115/230V 1Ø 60/50 Hz
N	FCM ODP	M	Input Shaft	P	25		( ) Indicates	Q	2/4 • 2 • WF • CT	Q	220V 1Ø 50 Hz
P	FCL TEFC		W/Feet	Q	30		metric frame motor	R	2/4 • 2 • RB • CT	R	110/220V 1Ø 50 Hz
Q	F7 TEFC	N	Input Shaft	R	40		and would be used in	S	4/8 • 2 • WF • VT	S	110V 1Ø 50 Hz
R	FCG TEFC		W/Flange	S	50		conjunction with	T	4/8 • 2 • RB • VT	T	115/208/230V 1Ø 60 Hz
S	Corrobloc	O	Scoop Mount	T	60		A-G in the second	V	4/8 • 2 • WF • CT	V	208/230V 1Ø 60 Hz
T	Corrobloc ECO +			U	300		character.	W	4/8 • 2 • RB • CT	W	230V 1Ø 60 Hz
V	ECO+ 1.0			V	75					X	Special 1Ø
W	ECO+ 1.15			W	100					Y	115/230V 1Ø 60 Hz
X	Farm Duty TEFC			X	125					Z	115V 1Ø 60 Hz
Y	Brake Motor			Y	150						
	Integral Mount			Z	200						
	for Reducers										

BEARING INFORMATION

FAN-COOLED MOTORS

Frame	Poles	Drive bearing	Non-drive bearing
LS63	All	6202	6202
LS80	All	6204	6203
LS90	All	6205	6204
LS100	All	6206	6205
LS112	All	6206	6205
LS132S	All	6208	6207
LS132M	All	6308	6307
LS160M	All	6309ZC3	6210ZC3
LS160L	All	6309ZC3	6210ZC3
LS180MT	All	6310ZC3	6210ZC3
LS180L	All	6310ZC3	6212ZC3
LS200L	All	6312C3	6214C3
LS225S	All	6314C3	6214C3
LS225M	All	6314C3	6214C3
LS250M	All	6315C3	6215C3
LS280S	All	6317C3	6317C3
LS280M	All	6317C3	6317C3
LS315S	2	6317C3	6317C3
LS315S	4 - 8	6320C3	6317C3
LS315M	2	6317C3	6317C3
LS315M	4 - 8	6320C3	6317C3

EASA Technical Manual © 1996-2012, Electrical Apparatus Service Association, Inc.

LIMA ELECTRIC CO.

(Now Marathon Electric Mfg. Corp., part of Regal-Beloit Corp.)

DATE CODES

The date code is two letters following the serial number on the nameplate. The first letter indicates the year, the second letter the month.

Year			Month	
1958 — A	1969 — M	1980 — B	January	A
1959 — B	1970 — N	1981 — C	February	B
1960 — C	1971 — P	1982 — D	March	C
1961 — D	1972 — R	1983 — E	April	D
1962 — E	1973 — S	1984 — F	May	E
1963 — F	1974 — T	1985 — G	June	F
1964 — G	1975 — U	1986 — H	July	G
1965 — H	1976 — W	1987 — J	August	H
1966 — J	1977 — X	1988 — K	September	J
1967 — K	1978 — Z	1989 — L	October	K
1968 — L	1979 — A	1990 — M	November	L
			December	M

TYPE DESIGNATIONS

RS	Dripproof
E	Totally-enclosed, fan-cooled
EX	Explosion-proof
SER	Alternators
MAC	Alternators

BEARING INFORMATION

Frame	Motor type	Bearings—Both ends	Description
66	RS-TE	W204PP	
182-4	RS-E-RE-EX	205	SRDWS
203-4	RS-TE	W206PP	
213-5	RS-E-RE-EX	206	SRDWS
224-5	RS-TE-E-EX-ED	W206PP	
254	RS	W207PP	
254	E-EX-ED	S3507	
254U-6U	RS-E-RE-EX	208	SRDWS
284	RS	W208PP	
284	E-EX-ED	S3508	
284U-6U	RS-E-RE-EX	309	SRDWS
324-6	RS	W309PP	
324-6	E-EX-ED	S3609	
324U-6U	RS-E-RE-EX	311	SRDWS
364-5	RS	W311 PP	
364U-5U	RS-E-RE-EX	312	SRDWS
364-5	RE	SKF6311	
404-5	RS	W312PP	
404-5	RE	SKF6312	
404U-5U	RS	313	SRDWS
444-5	RE-RS	SKF6313	
444-5	E-RE-EX	313	SWO
444U-5U	RS	316	SWDS
504-5	RS	317	SWO
504-5	RE	S3615	
504-5	E-RE-EX	315	SRDWS

SRDWS - Single row double width sealed
SWDS - Single width double sealed
SWO - Single width open

EASA Technical Manual © 1996-2012, Electrical Apparatus Service Association, Inc.

LINCOLN ELECTRIC CO.

(Now Lincoln Motors, part of Regal-Beloit Corp.)

DATE CODES

MOTORS MADE PRIOR TO 1993

The serial numbers shown are the first numbers used on motors in that year.	1961 - 162556	1969 - 515400	1977 - 1691900	1985 - 2941101
	1962 - 168096	1970 - 624300	1978 - 1875001	1986 - 3057906
	1963 - 180654	1971 - 753500	1979 - 2056001	1987 - 3175872
	1964 - 200100	1972 - 872800	1980 - 2256401	1988 - 3312158
	1965 - 239287	1973 - 1031000	1981 - 2416444	1989 - 3457211
1958 - 154814	1966 - 288700	1974 - 1225000	1982 - 2580246	1990 - 3636462
1959 - 156315	1967 - 358200	1975 - 1431000	1983 - 2692637	1991 - 3760720
1960 - 159250	1968 - 434300	1976 - 1540200	1984 - 2801779	1992 - 3861796

MOTORS MADE FROM 1993 TO NOVEMBER 1999 SERIAL NUMBERS BEGINNING WITH “U”

Example: U1 94 08 123456

Third and fourth digits represent the year and month: “94” = 1994
Fifth and sixth digits represent the month: “08” = August

MOTORS MADE AFTER NOVEMBER 1999 SERIAL NUMBERS BEGINNING WITH “M”

Example: MB 6030 0 7A

Last two characters represent the year and month: “7A” = January 2000
(See the following chart for coding.)

	Jan.	Feb.	Mar.	Apr.	May	June	July	Aug.	Sep.	Oct.	Nov.	Dec.
1999	6A	6B	6C	6D	6E	6F	6H	6J	6K	6L	6M	6N
2000	7A	7B	7C	7D	7E	7F	7H	7J	7K	7L	7M	7N
2001	8A	8B	8C	8D	8E	8F	8H	8J	8K	8L	8M	8N
2002	9A	9B	9C	9D	9E	9F	9H	9J	9K	9L	9N	9N
2003	AA	AB	AC	AD	AE	AF	AH	AJ	AK	AL	AM	AN
2004	BA	BB	BC	BD	BE	BF	BH	BJ	BK	BL	BM	BN

EASA Technical Manual © 1996-2012, Electrical Apparatus Service Association, Inc.

TYPE DESIGNATION

The following explains the prefix letters of the code numbers:

TF or T	TEFC (totally-enclosed, fan-cooled)
TV	ODP (open dripproof)
TM	Multiguard encapsulated
TA	TEAO (air over)
TN	TENV (non-vented)
SM	Non price book special motor

The following explains the suffix letters of the code numbers:

B	NEMA F-2 mount
C	C face end bracket (drive end only)
CR	C face end bracket (blind end only)
CC	Double C face end brackets
DX	Double shaft extension (X = 1,2,3, etc.)
E	Without fan and shroud (obsolete)
F	Fungus proofed
G	Special low-temperature grease
HS	Dynamic balance (precision)
K	Omit conduit box
JM	Close-coupled pump motor
JP	Close-coupled pump motor
N	No feet
R	Resilient mount
S	Special (usually paint color)
Y	Wye-Delta start option

Example: TV-3732-A1-B-C

BEARING INFORMATION

Frame	U frame		T frame	
	Front bearing	Drive bearing	Front bearing	Drive bearing
143-145	—	—	203	205
182-184	205	205	205	207
213-215	306	306	206	208
254-256	307	307	208	309
284-286	307	309	209	310
324-326	309	311	309	311
364-365	309	311	311	313
404-405	311	313	313	315
444-445	313	315	315	318

EASA Technical Manual © 1996-2012, Electrical Apparatus Service Association, Inc.

LOHER DRIVE SYSTEMS

(Part of Flender ATB-Loher)

TYPE CODE FOR 3-PHASE MOTORS

Digit 1	A = Totally-enclosed, fan-cooled D = Explosion-proof, Zone 1 (Exc) E = Totally-enclosed, fan-cooled, increased safety motor, Zone 1 (Exc)	
Digit 2	N - Squirrel cage, low-voltage motor M = Same as “N” except VIK design B = Same as “N” but with brake V = Drives fan, squirrel cage, low-voltage, totally-enclosed, non-ventilated construction	
Digit 3	C = Aluminum frame with fins G = Cast iron frame with fins R = Steel frame with tubes R = Steel frame with fins W = Cast iron or steel frame, water cooled	
Digit 4	A	Without explosion protection
	H or T	450°C (Maximum surface temperature at ambient of 40°C
	J or U	300°C
	K or V	200°C
	L or W	135°C
	M or X	100°C
	N or Y	85°C
Digit 5 through 7	Metric frame size (IEC Stds.)	
Digit 8	Frame length	S — Short M — Medium L — Long
Digit 9	Output or development space	

		Single speed		Two speed	
Digit 10 & 11	Number of poles	02	2 pole	42	4/2 poles
		04	4 pole	64	6/4 poles
		06	6 pole	84	8/4 poles
		08	8 pole	86	8/6 poles
		10	10 pole		

Digit 12	Mounting configuration B3 = Horizontal, foot mount B5 = Horizontal, flange mount V1 = Vertical, shaft down

BEARING INFORMATION

TOTALLY-ENCLOSED, FAN-COOLED MOTORS

		Horizontal		Vertical	
Frame	Poles	Drive End	Opp. Drive End	Drive End	Opp. Drive End
90	2-8	6205-2ZC3	6205-2ZC3	6205-2ZC3	6205-2ZC3
100	2-12	6206-2ZC3	6205-2ZC3	6206-2ZC3	6205-2ZC3
112	2-12	6306-2ZC3	6206-2ZC3	6306-2ZC3	6206-2ZC3
132	2-12	63082ZC3	6208-2ZC3	6308-2ZC3	6208-2ZC3
160	2-12	6309-2ZC3	6210-2ZC3	6309-2ZC3	6210-2ZC3
180	2-12	6310-2ZC3	6210-2ZC3	6310-2ZC3	6210-2ZC3
200	2-12	6212-2ZC3	6212-2ZC3	6212-2ZC3	6212-2ZC3
225	2	6213C3	6213C3	6212C3	6213C3*
225	4-12	6213C3	6213C3	6213C3	6213C3
250	2	6215C3	6215C3	6215C3	6215C3*
250	4-12	6215C3	6215C3	6215C3	6215C3
280	2	6217C3	6217C3	6217C3	6217C3*
280	4-12	6217C3	6217C3	6217C3	6217C3
315	2	6316C3	6316C3	6316C3*	6316C3*
315	4-12	6219C3	6219C3	6219C3	6219C3
355	2	6316C3	6316C3	6316C3*	6316C3*
355	4-12	6320C3	6320C3	6320C3	6320C3
400	2	6317C3**	6317C3**	6317C3**	7317B**
400	4-12	6322C3	6322C3	6322C3	7322B
450	2	6318C3**	6318C3**	6318C3**	7317B**
450	4-12	6324C3	6324C3	6324C3	7324B
500	4-12	6324C3	6324C3	6324C3	7324B
560	4-12	6330M.C3	6330M.C3	6330M.C3	7330BMP

* C4 bearing for 60 Hz service
** For 50 Hz service only, for 60 Hz services upon request

EASA Technical Manual © 1996-2012, Electrical Apparatus Service Association, Inc.

BEARING INFORMATION—CONTINUED

EXPLOSION-PROOF MOTORS

Frame	Poles	Horizontal		Vertical	
		Drive end	Opp. drive end	Drive end	Opp. drive end
63	2-4	6202-2Z	6202-2Z	6202-2Z	6202-2Z
71	2-8	6203-2Z	6203-2Z	6203-2Z	6203-2Z
80	2-8	6204-2Z	6204-2Z	6204-2Z	6204-2Z
90	2-8	6205-2ZC3	6205-2ZC3	6205-2ZC3	6205-2ZC3
100	2-8	6206-2ZC3	6206-2ZC3	6206-2ZC3	6206-2ZC3
112	2-8	6306-2ZC3	6306-2ZC3	6306-2ZC3	6306-2ZC3
132	2-8	6308-2ZC3	6308-2ZC3	6308-2ZC3	6308-2ZC3
160	2-8	6310C3	6310C3	6310C3	6310C3
180	2-8	6311C3	6311C3	6311C3	6311C3
200	2	6312C3	6312C3	6312C3	6312C3*
200	4-8	6312C3	6312C3	6312C3	6312C3
225	2	6314C3	6314C3	6314C3	6314C3*
225	4-8	6314C3	6314C3	6314C3	6314C3
250	2	6314C3	6314C3	6314C3	6314C3*
250	4-8	6316C3	6316C3	6316C3	6316C3
280	2	6316C3	6316C3	6316C3	6316C3*
280	4-8	6317C3	6317C3	6317C3	6317C3
315	2	6316C3	6316C3	6316C3*	6316C3
315	4-8	6320C3	6320C3	6320C3	6320C3
355	2	6316C3	6316C3	6316C3*	6316C3*
355	4-8	6320C3	6320C3	6320C3	6320C3
400	2	6317C3**	6317C3**	6317C3**	7317BM**
400	4-8	6322C3	6322C3	6322C3	7322BMP
450	4-8	6322C3	6322C3	6322C3	7322BMP

* C4 bearing for 60 Hz service
** For 50 Hz service only, for 60 Hz services upon request

BEARING INFORMATION—CONTINUED

INCREASED SAFETY MOTORS

Frame	Poles	Horizontal		Vertical	
		Drive end	Opp. drive end	Drive end	Opp. drive end
63	2-4	6202-2Z	6202-2Z	6202-2Z	6202-2Z
71	2-8	6203-2Z	6203-2Z	6203-2Z	6203-2Z
80	2-8	6204-2Z	6204-2Z	6204-2Z	6204-2Z
90	2-8	6205-2ZC3	6205-2ZC3	6205-2ZC3	6205-2ZC3
100	2-8	6206-2ZC3	6206-2ZC3	6206-2ZC3	6206-2ZC3
112	2-8	6306-2ZC3	6306-2ZC3	6306-2ZC3	6306-2ZC3
132	2-8	6308-2ZC3	6308-2ZC3	6308-2ZC3	6308-2ZC3
160	2-8	6310C3	6310C3	6310C3	6310C3
180	2-8	6311C3	6311C3	6311C3	6311C3
200	2	6312C3	6312C3	6312C3	6312C3*
200	4-8	6312C3	6312C3	6312C3	6312C3
225	2	6314C3	6314C3	6314C3	6314C3*
225	4-8	6314C3	6314C3	6314C3	6314C3
250	2	6314C3	6314C3	6314C3	6314C3*
250	4-8	6316C3	6316C3	6316C3	6316C3
280	2	6316C3	6316C3	6316C3	6316C3*
280	4-8	6317C3	6317C3	6317C3	6317C3
315	2	6316C3	6316C3	6316C3*	6316C3
315	4-8	6320C3	6320C3	6320C3	6320C3
355	2	6316C3	6316C3	6316C3*	6316C3*
355	4-8	6320C3	6320C3	6320C3	6320C3
400	2	6317C3**	6317C3**	6317C3**	7317BM**
400	4-8	6322C3	6322C3	6322C3	7322BMP
450	4-8	6322C3	6322C3	6322C3	7322BMP

* C4 bearing for 60 Hz service
** For 50 Hz service only, for 60 Hz services upon request

EASA Technical Manual © 1996-2012, Electrical Apparatus Service Association, Inc.

LOUIS ALLIS CO.

(Out of business)

DATE CODES

APPROXIMATE MOTOR SERIAL NUMBERS SHIPPED OR ASSIGNED

Year	From	To
1950	1557001	1669800
1951	1669801	1806200
1952	1806201	1907700
1953	1907701	2028300
1954	2028301	2119600
1955	2119601	2256043
1956	2256044	2404981
1957	2404982	2500550
1958	2500551	2571700
1959	2571701	2674800
1960	2674801	2782240
1961	2782241	2830170

In November 1961 a new serial number system was started whereby the order and serial number are the same. The order number is preceded by the last digit of the year of manufacture.

1 - XXXXXX - 001 (1961, 1971, etc.)
7 - XXXXXX - 001 (1967, 1977, etc.)

TYPE DESIGNATIONS

The PACER and PACEMAKER motor type identification consists of three basic parts. The first part identifies the mechanical construction of the motor. The second part, a number, separates the first and third portions of the type and identifies the motor's insulation system. The third part identifies the electrical design of the motor.

Example: COG_____ 4 _____ B
Dripproof - Class B insulation - NEMA Design B

Mechanical Type

COG	Dripproof
CG	Dripproof, outdoor service, special construction for encapsulated motor
CO	Open housings and brackets
CI	Enclosed, non-ventilated, smooth housing
CJI	Enclosed, non-nentilated, ribbed housing
CJ	Enclosed, ribbed housing, fan-cooled
CR	Enclosed, smooth housing, fan-cooled
CJG	Enclosed, ribbed housing, fan-cooled Clean-Flo motor
CJJ	Enclosed, fan-cooled, ribbed housing, iron range motor

Mechanical Type—Continued

CJB	Enclosed, with heat exchanger
CRP	Enclosed, fan-cooled, smooth housing, feet on bearing brackets
CEI	Explosion-proof, non-ventilated, ribbed housing, Class I Group D or Class I Group D, Class 2 Group F & G
CEEI	Explosion-proof, non-ventilated, ribbed housing, Class I Group C
CEVI	Explosion-proof, non-ventilated, Bureau of Mines
CE	Explosion-proof, fan-cooled, ribbed housing, Class I Group D or Class I Group D, Class 2 Group F & G
CEE	Explosion-proof, fan-cooled, ribbed housing, Class I Group C
CEB	Explosion-proof, with heat exchanger
CEV	Bureau of Mines
CMP	Motor parts
HEM	Hermetic
CT	Can type
P	Dripproof, pancake
PI	Pancake, enclosed, non-vent, smooth housing
PJI	Pancake, enclosed, non-vent, ribbed housing
PJ	Pancake, enclosed, fan-cooled

Insulation

2	Class A insulation, special Class A or special Class A Epoxy, ultimate temperature 105°C.
3	Class E insulation, ultimate temperature 115°C.
4	Class B insulation, special Class B or special Class B Epoxy, ultimate temperature 130°C.
5	Class F or special F insulation, ultimate temperature 155°C.
6	Class H insulation, ultimate temperature 180°C.
8	_____
9	Special insulation system not covered by one of the above.

Electrical Type

A	NEMA Design A
B	NEMA Design B
C	NEMA Design C
D	NEMA Design D
L	NEMA Design L, single phase
M	NEMA Design M, single phase low LRA
H	Wound rotor
Z	Synchrospede
R	Reversing duty

TYPE DESIGNATIONS—CONTINUED

Electrical Type—Continued

E	Extractor
W	Washer
NB	Multispeed–Torque similar to single speed NEMA B motor
NC	Multispeed–Torque similar to single speed NEMA C motor
ND	Multispeed–Torque similar to single speed NEMA D motor
S	Special, none of the above

EASA Technical Manual © 1996-2012, Electrical Apparatus Service Association, Inc.

TYPE DESIGNATIONS—CONTINUED

MECHANICAL TYPE

The first letter or letters in the type designation denote the mechanical construction and type of enclosure of Louis Allis motors and generators. The following is a list of these designation letters.

Type letter	Type of enclosure	Description
COG	Open and open dripproof	Dripproof housing & brackets–rerated
OG		Dripproof housing & brackets
CO		Open housing & brackets–rerated
O		Open housing & brackets
OGD		Dripproof housing & type “G” dripproof brackets–double end ventilated
SO		Enclosed housing & Open brackets–single end ventilated
SOG		Enclosed housing & dripproof brackets–single end ventilated
CPC		Dripproof PANCAKE–housing back bearing bracket & flange are one
CF	Open splash-proof	Splash-proof housing & brackets, single or double end ventilated–rerated
F		Splash-proof housing & brackets, single or double end ventilated
CI	Fully enclosed	Enclosed housing & brackets–non-ventilated, smooth or ribbed housing–rerated
I		Enclosed housing & brackets–non-ventilated, smooth or fibbed housing
CJI		Enclosed housing & brackets–non-ventilated, type “J” construction–rerated
JI		Enclosed housing & brackets–non-ventilated, Type “J” construction
J	Enclosed fan	Standard enclosed, single or double end ventilated
CRP		Standard enclosed feet on brackets–rerated
RP		Standard enclosed feet on brackets
RD		Standard enclosed
CEI	Explosion-proof* non-ventilated	Class I Group D–rerated
EI		Class I Group D
CEEI		Class I Group C–rerated
EEI		Class I Group C
CERI		Class II Group E–rerated
ERI		Class II Group E
CJEI		Class II Groups F & G–L.A. Line
JEI		Class II Groups F & G
EVI		Bureau of Mines
CE	Explosion-proof* ventilated	Class I Group D–rerated
E		Class I Group D
CEE		Class I Group C–rerated
EE		Class I Group C
CER		Class II Group E–rerated
ER		Class II Group E
CJE		Class II Groups F & G–rerated
JE		Class II Groups F & G
EV		Bureau of Mines

TYPE DESIGNATIONS—CONTINUED

MECHANICAL TYPE—CONTINUED

Type letter	Type of enclosure	Description
AB	Pipe self-ventilated	Enclosed housing, open brackets with air inlet and outlet
B	Pipe forced-vent. (auxiliary blower cooled)	Enclosed housing, open brackets with air inlet and outlet
LC	Liquid cooled	Cooling liquid circulated through coils or ducts
D DI	Sanitary	Open, single end ventilated Totally-enclosed
CT HERM	Stator & rotor only (same designations whether rolled shell or shell-less)	Can types Hermetics
SU	Submersible	Water-filled motors with dry windings
SP	Sewage pump	
S SR SRP	Arbor	Open Enclosed, fan-cooled Feet on housing Feet on brackets
C	Cement mill	Open, self cleaning
K	Textile	Open, self cleaning
LI	Loom	Enclosed non-ventilated
TO TI	Short overall length (Flat brg.)	Short bearing brackets Open Enclosed non-ventilated
CPG CJPC CIPC	Spacesaver	Open Dripproof Enclosed, fan-cooled Enclosed, non-ventilated
AG[1]	Frequency convertor, set	Motor driven–open two bearing
OPH	AC generator	Open, high frequency Dripproof, high frequency

NOTES:
1 Effective March 1, 1952, changed from type EG to type AG in order to avoid confusion with explosion-proof.
* Class I Group D motors may also be used for Class II Groups E & G.
Class I Group C motors may also be used for Class I Group D and Class II Groups F & G.
Class II Group E motors may also be used for Class I Group D and Class II Groups F & G.
Class I Group C motors may also be used for Class II Group E after modifications are made.

EASA Technical Manual © 1996-2012, Electrical Apparatus Service Association, Inc.

TYPE DESIGNATIONS—CONTINUED

ELECTRICAL TYPE DESIGNATION

The final letter or letters in the type designations denote the electrical characteristics of Louis Allis motors and generators. The following is a list of these designations letters.

Type letter	Motor type	NEMA design	Locked torque	Locked current	Slip
S	AC polyphase squirrel cage - single speed	A	Normal	Normal	Low
X		B	Normal	Low	Low
B		-	High	Normal	Low
A		C	High	Low	Low
AA		-	High	Below Type “A”	Low
AN		-	High	Below Type “AA”	Low
K		D	High	Low	High
KL		D	High	Low	High
W		F	Low	Low	Low
WX	Reversing washer		Low	Low	Low
WE			Low	Low	Low
T	Torque motors				
MS	Squirrel cage- multispeed		Normal	Normal	Low
MX			Normal	Low	Low
MA			High	Low	Low
MK			High		High
MKL			High		High
MW			Low	Low	Low
MWX	Multispeed rev. washer		Low	Low	Low
MWE			Low	Low	Low
H	Wound rotor		Normal		
HK			High		
	AC single phase				
	Capacitor start, ind. run				
	motor-mounted capacitor				
CU	& speed (voltage) relay		Normal		Low
	Separately mounted				
CN	capacitor & speed relay		Normal		Low
	Separately mounted X-line				
	starter including				
CS#	Capacitor & speed relay		Normal		Low
	Capacitor start, cap. run				
	Separately mounted capacitor				
CNC	& speed relay		Normal		Low
	Separately mounted X-line				
	starter including				
CSC#	capacitors & speed relay		Normal		Low
	Select-A-Spede power units				
LA	For use with 1800 rpm MG sets				
LB	For use with 3600 rpm MG sets				

Effective March 1, 1952, changed from types CN and CNC to types CS and CSC respectively in order to avoid confusion with single-phase motors without the X-Line starter as a complete unit.

TYPE DESIGNATIONS—CONTINUED

ELECTRICAL TYPE DESIGNATION—CONTINUED

Type letter	Motor
Z	AC synchronous reluctance, “Syncro-Spede”
SN	AC synchronous–salient poles
Y	AC motor with brake winding
AD	Inside-out motors
CAD	Inside-out motors (using rerated parts)
NA	DC constant speed
NW	DC adjustable speed
TRNA	DC traction motor
NR	Inverted rotary
DYNA	Dynamometer, constant speed
DYNW	Dynamometer, adjustable speed
	Metadyne
AM	Amplifier
GM	Generator
MM	Motor
RM	Regular dynamo
TM	Transformer

BEARING INFORMATION

STANDARD FOOT MOUNTED

Frame	Dripproof–Type COG		Enclosed–Type CJ		Explosion-proof–Type CE	
	Shaft ext. (back) bearing	Front bearing	Shaft ext. (back) bearing	Front bearing	Shaft ext. (back) bearing	Front bearing
140T	25BC02JPP	17BC02JPP	25BC02JPP	17BC02JPP	25BC02J	17BC02JP
180T	30BC02JPP	25BC02JPP	30BC02JPP	25BC02JPP	35BC02J	25BC02JP
210T	35BC03JPP	30BC02JPP	30BC03JPP	30BC02JPP	35BC03J	35BC02J
250T	45BC03JP	35BC02JP	45BC03JP	35BC02JP	45BC03J	45BC02J
280T	55BC03JP	35BC02JP	55BC03JP	35BC02JP	55BC03J	55BC02J
280TS	55BC03JP	35BC02JP	55BC03JP	35BC02JP	55BC03J	55BC02J
320T	60BC03JP	50BC02JP	60BC03JP	50BC02JP	60BL03J	60BC02J
320TS	60BC03JP	50BC02JP	60BC03JP	50BC02JP	60BL03J	60BC02J
360T	65BL03J	65BC02J	65BL03J	65BC02J	65BL03J	65BC02J
360TS	65BC02J	65BC02J	65BC02J	65BC02J	65BC02J	65BC02J
400T	80BL03J	70BC02J	80BL03J	70BC02J	80BL03J	70BC02J
400TS	70BC02J	70BC02J	70BC02J	70BC02J	70BC02J	70BC02J
440T	90BL03J	80BC02J	90BL03J	80BC02J	90BL03J	80BC02J
440TS	80BC02J	80BC02J	80BC02J	80BC02J	80BC02J	80BC02J

NOTES: Bearing sizes listed above apply only to standard ratings. Refer to factory, giving serial number, for positive identification of special motor bearings.

EASA Technical Manual © 1996-2012, Electrical Apparatus Service Association, Inc.

BEARING INFORMATION—CONTINUED

C FACE FOOT MOUNTED

Frame	Dripproof–Type COG		Enclosed–Type CJ		Explosion-proof–Type CE	
	Shaft ext. (back) bearing	Front bearing	Shaft ext. (back) bearing	Front bearing	Shaft ext. (back) bearing	Front bearing
140T	35BC02JPP	17BC02JPP	35BC02JPP	17BC02JPP	35BC02JP	17BC02JP
180T	35BC03JPP	25BC02JPP	30BC02JPP	25BC02JPP	30BC02JP	25BC02JP
210T	35BC03JPP	30BC02JPP	35BC03JPP	30BC02JPP	35BC03JP	30BC02J
250T	55BC03JP	35BC02JP	55BC03JP	35BC02JP	55BC03JP	35BC02J
280T	60BC03JP	35BC02JP	60BC03JP	35BC02JP	60BC03JP	35BC02J
320T	65BC03JP	50BC02JP	65BC03JP	50BC02JP	65BC03JP	50BC02J
360T	65BC03J	65BC02J	65BC03J	65BC02J	65BC03J	65BC02J
400TS	70BC03J	70BC02J	70BC03J	70BC02J	70BC03J	70BC02J
440TS	80BC03J	80BC02J	80BC03J	80BC02J	80BC03J	80BC02J

D FLANGE FOOT MOUNTED

Frame	Dripproof–Type COG		Enclosed–Type CJ		Explosion-proof–Type CE	
	Shaft ext. (back) bearing	Front bearing	Shaft ext. (back) bearing	Front bearing	Shaft ext. (back) bearing	Front bearing
140T	25BC02JPP	17BC02JPP	25BC02JPP	17BC02JPP	25BC02J	17BC02JP
180T	35BC02JPP	25BC02JPP	35BC02JPP	25BC02JPP	35BC02J	25BC02JP
210T	35BC03JPP	35BC02JPP	35BC03JPP	35BC02JPP	35BC03J	35BC02J
250T	45BC03JP	45BC02JP	45BC03JP	45BC02JP	45BC03J	45BC02J
280T	55BC03JP	55BC02JP	55BC03JP	55BC02JP	55BC03J	55BC02J
320T	60BC03JP	60BC02JP	60BC03JP	60BC02JP	60BC03J	60BC02J
360T	65BC03J	65BC02J	65BC03J	65BC02J	65BC03J	65BC02J
400TS	70BC03J	70BC02J	70BC03J	70BC02J	70BC03J	70BC02J
440TS	80BC03J	80BC02J	80BC03J	80BC02J	80BC03J	80BC02J

NOTES: Bearing sizes listed above apply only to standard ratings. Refer to factory, giving serial number, for positive identification of special motor bearings.

BEARING INFORMATION—CONTINUED

MOTORS OF STANDARD CONSTRUCTION

Type	Frame	Front bearing	Back bearing	Back bearing for C or D flange
COG	182	205KD	205KD	305KD
	184	205KD	205KD	305KD
	213	205KD	207KD	307KD
	215	205KD	207KD	307KD
	254U	209KD	209KD	309KD
	256U	209KD	209KD	309KD
	284U	211KD	311KD	311KD
	286U	211KD	311KD	311KD
	324U	212KD	312KD	312KD
	326U	212KD	312KD	312KD
	360US	213K	213K	313K
	360U	213K	313W	313K
	400US	214K	214K	314K
	400U	214K	314W	314K
	440US	216K	216K	316K
	440U	216K	316W	316K
	500SZ	316K	316K	320K
	500Z	316K	320W	320K
COG F AB B WP	580S	318K	318K	
	580SU	318K	318K	
	580U	318K	NU322	
	760S	318K	318K	
	760SU	318K	318K	
	760U	318K	NU322	
	680S	320K	320K	
	680SU	320K	320K	
	680U	320K	NU326	
	880S	320K	320K	
	880SU	320K	320K	
	880U	320K	NU326	
	960S	320K	320K	
	960SU	320K	320K	
	960U	320K	NU326	
	800S	322K	322K	
	800SU	322K	322K	
	800U	320K	NU326	
	1000S	322K	322K	
	1000SU	322K	322K	
	1000U	320K	NU326	

NOTES: Bearing sizes listed above apply only to standard ratings. Refer to factory, giving serial number, for positive identification of special motor bearings.

EASA Technical Manual © 1996-2012, Electrical Apparatus Service Association, Inc.

BEARING INFORMATION—CONTINUED

MOTORS OF STANDARD CONSTRUCTION

Type	Frame	Front bearing	Back bearing	Back bearing for C or D flange
CE CJ	180	205K	305K	305K
	210	207K	307K	307K
	250U	209K	309K	309K
	280U	211K	311K	311K
	320U	212K	312K	312K
	360US	213K	213K	313K
	360U	213K	313W	313K
	400US	214K	214K	314K
	400U	214K	314W	314K
	440US	216K	216K	316K
	440U	216K	316W	316W
	500SZ	316K	316K	320K
	500Z	316K	316K	320W
ET JT	960S	320K	320K	
	960SU	320K	320K	
	960U	320K	NU326	
	1200S	322K	322K	
	1200SU	322K	322K	
	1200U	322K	NU326	
E & J (cast frame)	589S & SU	318K	318K	
	589U	318K	NU222	
	689S & SU	320K	320K	
	689U	320K	NU322	
	8095S & SU	322K	322K	
	8095Z	322K	NU322	

NOTES: Bearing sizes listed above apply only to standard ratings. Refer to factory, giving serial number, for positive identification of special motor bearings.

BEARING INFORMATION—CONTINUED

Mech. type	OG		F		E and J		OGH	
Frame size	Front brg.	Back brg.	Front brg.	Back brg.	Front brg.	Back brg.	Front brg.	Back brg.
163	*206	*204	—	—	—	—	—	—
167	*204	*204	—	—	—	—	—	—
203	205	205	205	205	—	—	—	—
204	205	205	205	305	—	—	—	—
224	306	306	306	306	306	306	206	306
225	306	306	306	306	306	306	206	306
254	207	307	207	307	307	307	207	307
284	207	308	207	308	308	308	208	308
324	207	309	207	309	309	309	209	309
326	309	309	309	309	309	309	209	309
364	309	312	309	311	311	311	209	311
364S	309	309	309	309	311	311	209	309
365	309	312	309	311	311	311	209	311
365S	309	309	309	309	311	311	209	309
404	309	313	309	312	312	312	210	312
404S	309	312	309	312	312	312	210	312
405	309	313	309	312	312	312	210	312
405S	309	312	309	312	312	312	210	312
444	312	314	312	314	314	314	312	314
444S	312	314	312	314	314	314	312	314
445	312	314	312	314	314	314	312	314
445S	312	314	312	314	314	314	312	314
504U	314	316	314	316	316	316	312	316
504S	314	316	314	316	316	316	312	316
505	314	316	314	316	316	316	312	316
505S	314	316	314	316	316	316	312	316
107	314	316	314	316	—	—	312	316
107S	314	316	314	316	—	—	312	316
108	—	—	—	—	316	316	—	—
108S	—	—	—	—	316	316	—	—

*160 frame motors do not have bearing caps and are supplied with single shield bearings.

NOTES: Bearing sizes listed above apply only to standard ratings. Refer to factory, giving serial number, for positive identification of special motor bearings.

Different bearings may be used for:
1. Vertical motors
2. Flange type motors
3. Special shaft motors–double shaft motors
4. Brake motors
5. Motors for V-belt drives using smaller sheave diameters than NEMA recommend values.

EASA Technical Manual © 1996-2012, Electrical Apparatus Service Association, Inc.

BEARING INFORMATION—CONTINUED

MOTOR TYPES ONA, OGNA & INA

Frame size	Front bearing size	Back bearing (shaft ext.) size
203	205	305
204	205	305
224	206	306
225	206	306
254	207	307
284	208	308
3240	209	309
3260	209	309
4430-4440	210	312
5030-5040	212	314
5820-5830	212	316

MOTOR TYPES RNA, JNA & ENA

Frame size	Front bearing size	Back bearing (shaft ext.) size
203	205	305
204	205	305
224	206	306
225	206	306
254	207	307
284	208	308
3240	209	209
3260	309	309

PANCAKE MOTORS

Type bearing	Frame bearing	Front	Back
P	1811	204KD	205KD
PJ	1812	204KD	205KD
PJI	2121	205KD	207KD
	2132	205KD	207KD
	2541	205KD	307KD
	2542	205KD	307KD
	2851	207KD	309KD
	2852	207KD	309KD
	3281	209KD	311KD
	3281	209KD	311KD

EASA Technical Manual © 1996-2012, Electrical Apparatus Service Association, Inc.

MARATHON ELECTRIC MFG. CORP.

(Part of Regal-Beloit Corp.)

1950 - 1962: the date code is a letter for the year followed by a letter for the month.

1950 - L	1954 - R	1958 - V	January - A	May - E	September - K
1951 - M	1955 - S	1959 - W	February - B	June - F	October - L
1952 - N	1956 - T	1960 - X	March - C	July - H	November - M
1953 - P	1957 - U	1961 - Y	April - D	August - J	December - N
		1962 - Z			

1963 - 1971: the year code changed to:

1963 - 1	1966 - 4	1969 - 7
1964 - 2	1967 - 5	1970 - 8
1965 - 3	1968 - 6	1971 - 9

The month code is the same as for 1950 - 1962.

1972 - 1993: the year code changed to:

1972 - A	1976 - E	1980 - K	1984 - P	1988 - U	1992 - Y
1973 - B	1977 - F	1981 - L	1985 - R	1989 - V	1993 - Z
1974 - C	1978 - H	1982 - M	1986 - S	1990 - W	
1975 - D	1979 - J	1983 - N	1987 - T	1991 - X	

The month code is the same as for 1950 - 1962.

1994 - 2002: the year code changed to:

1994 - 1	1997 - 4	2000 - 7
1995 - 2	1998 - 5	2001 - 8
1996 - 3	1999 - 6	2002 - 9

The month code is the same as for 1950 - 1962.

2003 - 2024: the year code changed to:

2003 - A	2007 - E	2011 - K	2015 - P	2019 - U	2023 - Y
2004 - B	2008 - F	2012 - L	2016 - R	2020 - V	2024 - Z
2005 - C	2009 - H	2013 - M	2017 - S	2021 - W	
2006 - D	2010 - J	2014 - N	2018 - T	2022 - X	

The month code is the same as for 1950 - 1962.

Motors with overload protectors have a letter inserted between the date code letters in the last three of the above tables.

EASA Technical Manual © 1996-2012, Electrical Apparatus Service Association, Inc.

HOW TO READ A MODEL NUMBER

Integral Horsepower

EXAMPLE: 2QA215TBDRA7076ALL

2	Q	A	215T	B	D	R	A	7076	AL	L
1	2	3	4	5	6	7	8	9	10	11

1. **Date code–Year of manufacture**

2. **Thermal protection**

	UL-recognized motor/protector combination	UL-recognized motor construction
Automatic reset		
Q	Yes	Yes
S	No	No
U	No	Yes
W	*	Yes
Manual reset		
P	Yes	Yes
Z	No	Yes
X	No	No
None	None	None
V	No	Yes

* Motor protector combination is UL-recognized only if motor is used in direct drive fan duty application and is under locked-rotor condition, or is running under no-load condition.

3. **Date code**–Month of manufacture

4. **NEMA frame size**–(Integral motors–T and U designate standard shaft, TS and US designate short shaft, V designates vertical hollow shaft.)

5. **Electrical type**
   Single phase
   - A - Permanent split capacitor
   - B - Capacitor start, capacitor run
   - C - Capacitor start, induction run
   - N - Split phase start, capicitor run
   - S - Split phase

   Three phase
   - T - Three phase
   - H - Invertor duty
   - V - Medium voltage

Fractional Horsepower

EXAMPLE: 1PC48C17D2000AP

1	P	C	48	C	17	D	2000	A	P
1	2	3	4	5	6	7	10	11	12

6. **RPM or speed at 60 Hz (Fractional only)**
   - 34 - 2 pole, 3600 rpm
   - 17 - 1800 rpm
   - 11 - 6 pole, 1200 rpm
   - 8 - 8 pole, 900 rpm

7. **Enclosure**
   - D - Dripproof
   - E - Explosion-proof
   - F - Totally-enclosed, fan-cooled
   - G - Explosion-proof, fan-cooled
   - O - Open
   - P - Partial
   - S - Semi-enclosed
   - T - Totally-enclosed, non-ventilated

8. **Frame construction**
   - L - Aluminum (full frame)
   - Y - Aluminum (redesign–full frame)
   - Z - Aluminum (redesign–high mount down frame)
   - H - Aluminum–sourced
   - R - Rolled steel (full frame)
   - W - Rolled steel (redesign–full frame)
   - X - Rolled steel (redesign–high mount down frame)
   - B - Rolled steel–sourced
   - S - Cast iron (full frame)
   - N - Cast iron (redesign–full frame)
   - P - Cast iron (redesign–high mount down frame)
   - C - Cast iron–sourced

9. **Style number**

10. **Sequence number–last three digits (integral only)**
    - 001-025 = 2 pole, 3600 rpm
    - 026-075 = 4 pole, 1800 rpm
    - 076-100 = 6 pole, 1200 rpm
    - 101-125 = 8 pole, 900 rpm

11. **Minor modifications letter(s)**
    Fractional–1 letter; Integral–2 letters

12. **Manufacturing code**

BEARING INFORMATION

T-FRAME MOTORS

Old–Prior to 1981				New–1981 and after	
		Front bearing		Drive bearing	
Frame	Type	Old	New	Old	New
140T	All	203	203	205	205
180T	DP	203	203	206	206
180T	FS, FL	203	205	206	206
180T	GS	205	205	206	206
210T	DP, FS, GS	205	206	207	307
210T	FL	206	206	307	307
250T	All	207	208(1)	309	309
280T & TS	All	208	210	310	311
320T & TS	All	209	311	311	312
360T	DP	210	312	314	314
360T	FS, GS	312	312	314	314
360TS	DP	210	312	210	312
360TS	FS, GS	312	312	312	312
400T	All	212	313	316	316
400TS	All	212	313	212	313
440T	DP	316	316	318	318
440T	FS, GS	213	316	318	318
440T	All(2)	316	316	318	318NU
440TS	All	213	313	213	313

(1) 207 bearing in down frame “5000” series
(2) 6 pole motors, 150 hp and above, 4 pole motors 200 hp and above
DP - Dripproof
FS - Totally-enclosed, fan-cooled cast iron frame
FL - Totally-enclosed, fan-cooled aluminum frame
GS - Explosion-proof

U-FRAME MOTORS

Frame	Front bearings	Drive bearings
182-184	203	205
213-215	205	207
254-256	207	308
284-286	208	310
324-326	209	311

T-FRAME MOTORS

Frame	Front bearings	Drive bearings
254-256T	207	309
284-286T	210	311
284-286T	210	311
324-326T	311	312
324-326TS	311	312
364-365T	312	314
364-365TS	312	312
404-405T	313	316
404S-405TS	313	313
444-445T	316	318/NU318
444-445TS	313	313
449T	318	319/NU319
449TS	313	313

EASA Technical Manual © 1996-2012, Electrical Apparatus Service Association, Inc.

BEARING INFORMATION—CONTINUED

505 - 510 FRAMES

Frame	Front bearings	Drive bearings
505U	219	NU219
505US, 2 pole	216	216
505US, 4 & 6 pole	219	219
508U	222	NU222
508US, 2 pole	216	216
508US, 4 & 6 pole	219	219
510U	222	NU222
510US	219	219

MAXIMUM SAFE MECHANICAL SPEEDS

Frame	Direct coupled 3600 rpm	Direct coupled 1800, 1200 & 900 rpm
56-184	7200	5400
213-256	5400	4200
284-286	5400	3600
324-326	4500	3600
364-365	4500	2700
404-449	3600	2700

Note: TEFC motors are limited to 4000 rpm.

ORIGINAL NEMA FRAMES

Frame	Front bearings	Drive bearings
203	87504	87504
204	99604	99604
224	87506	87506
254	99606	99606
284	99607	99607
326	99609	99609
364-365	6210	6312
364S-365S	6210	6210
364-365 Vertical	6210	6312
404-405	6212	6314
404S-405S	6212	6212
404-405 Vertical	6212	6314
444-445	6213	NU315
444S-445S	6213	6213
444-445 Vertical	6213	6316
500	6317	NU317
500S	6317	6317

MASTER ELECTRIC

(Now Relianace Electric Co., part of Baldor Electric Co.)

DATE CODES

METHOD OF NUMBERING

Serial numbers of Master Electric products indicate:
1st letter: The YEAR in which the unit was built.
2nd letter: The MONTH in which the unit was built.
3rd letter: Special kind of product and when used, such as for Speedrangers.
4th letter: The INDIVIDUAL units by use of successive numerals placed immediately after the above letters.

January 1, 1953, and thereafter:

1. 1st letter

A - 1953	E - 1957	J - 1961	N - 1965	S - 1969	W - 1973
B - 1954	F - 1958	K - 1962	P - 1966	T - 1970	X - 1974
C - 1955	G - 1959	L - 1963	Q - 1967	U - 1971	Y - 1975
D - 1956	H - 1960	M - 1964	R - 1968	V - 1972	Z - 1976

2. 2nd letter–uses second half of alphabet.

N - Jan.	Q - Mar.	S - May	U - July	W - Sept.	Y - Nov.
P - Feb.	R - Apr.	T - June	V - Aug.	X - Oct.	Z - Dec.

3. 3rd letter:

V - Speedranger

4. Numerals starting each month from 1 up:

A - Large motors numbered from 1 to 299.
B - Intermediate motors numbered from 300 to 1899.
C - Small motors numbered from 1900 up.

Examples

(A) FW 67 - 67th motor built in September 1958.

(B) CY 153 - 153rd large motor built in November 1955.

(C) ANV 25 - 25th Speedranger built in January 1953.

EASA Technical Manual © 1996-2012, Electrical Apparatus Service Association, Inc.

NEWMAN ELECTRIC MOTORS

(Now Brook Crompton N.A.)

TYPE DESIGNATIONS

See Page 1-120, “Nomenclature Key for Newman Frame References.”

BEARING INFORMATION

DRIPPROOF MOTORS

NEMA frame reference	Newman reference	Drive end bearing	Front end bearing
143T/145T	CC12	SKF 6205	SKF 6205
182T/184T*	DC15	SKF 6206	SKF 6205
182T/184T**	DC15	SKF 6306	SKF 6205
213T/215T*	DC18 - DD18	SKF 6307	SKF 6205
213T/215T**	DC18 - DD18	SKF 6308	SKF 6206
254T/256T*	DC21 - DD21	SKF 6310	SKF 6207
256T**	DC21 - DD21	SKF 6310	SKF 6307
284T/286T	DC24 - DD24	SKF 6311	SKF 6308
284TS/286TS***	DD24	SKF 6311	SKF 6308
324T/326T	DC27 - DD27	SKF 6313	SKF 6310
324TS/326TS***	DD27	Hoffmann 365V3M***	SKF 6310
364T/365T	DC31 - DD31	SKF 6316	SKF 6312
364TS/365TS***	DD31	Hoffmann 360V3M***	Hoffmann 360V3M***
404T/405T	DC34 - DD34	SKF 6318	SKF 6312
404TS/405TS***	DD34	Hoffmann 365V3M***	Hoffmann 360V3M***
444T/445T	DC37 - DD37	SKF NU318	SKF 6314
444TS/445TS***	DD37	Hoffmann 370V3M***	Hoffmann 370V3M***
504Z/505Z	DC43 - DD43	SKF NU320M	SKF 6318
504ZS/505ZS***	DD43	SKF NU315M	SKF NU315M Hoffmann 375V3M***
509Z	DC43 - DD43	SKF NU320M	SKF 6318
509ZS	DC43- DD43	Hoffmann 375V3M***	Hoffmann 375V3M***

* End to middle ventilated (last letters in Newman frame reference “BB”)
** End to end ventilated (last letters in Newman frame reference “BBA”)
*** 3600 rpm motors

BEARING INFORMATION—CONTINUED

TOTALLY-ENCLOSED, FAN-COOLED MOTORS

NEMA frame reference	Newman reference	Drive end bearing	Front end bearing
143T/145T	EC12	SKF 6205	SKF 6205
182T/184T	EC14	SKF 6206	SKF 6205
184T	EC16	SKF 6306	SKF 6206
213T	EC16	SKF 6208	SKF 6206
213T/215T	EC18 - ED18	SKF 6308	SKF 6207
254T/256T	EC21 - ED21	SKF 6310	SKF 6207
284T/286T	EC24 - ED24	SKF 6311	SKF 6210
284TS/286TS	ED24	SKF 6310	SKF 6210
324T/326T	EC27 - ED27	SKF 6313	SKF 6310
324TS/326TS	ED27	Hoffman 360V3M*	SKF 6310
364T/365T	EC31 - ED31	SKF 6316	SKF 6312
364TS/365TS	ED31	Hoffmann 360V3M*	Hoffmann 360V3M*
404T/405T	EC34 - ED34	SKF 6318	SKF 6313
404TS/405TS	ED34	Hoffmann 365V3M*	Hoffmann 365V3M*
444T/445T	EC37 - ED37	SKF N318	SKF 6314
444TS/445TS	ED37	Hoffmann 370V3M*	Hoffmann 370V3M*
504Z/505Z	EC43 - ED43	SKF NU319	SKF 6315
504ZS/505ZS	ED43	Hoffmann 375V3M*	Hoffmann 375V3M*

Ball bearings are “standard” fit when of SKF manufacture or “00” fit for other makers using the dot system to denote radial clearance. Roller bearings are “standard” fit when of SKF manufacture or “000” fit for other makers. Bearings marked * should have machined bronze cage centered on the rolling elements.

TOTALLY-ENCLOSED, FAN-COOLED MOTORS

Frame	Poles	Drive end bearing	Non-drive bearing
D90	All	6205Z	6205Z
D100	All	6206Z	6206Z
D112	All	6206Z	6206Z
D132	All	6208Z	6208Z
D160	All	6310	6207
D180	All	6311	6210
D200	All	6313	6310
D225	2	6312	6312
D225	4 & UP	6316	6312
D250	2	6313	6313
D250	4 & UP	6318	6313
D280	2	6314	6314
D280	4 & UP	N318	6314
D315	2	6315	6315
D315	4 & UP	NU319	6315

Bearings are normally C3 internal clearance.

EASA Technical Manual © 1996-2012, Electrical Apparatus Service Association, Inc.

BEARING INFORMATION—CONTINUED

DRIPPROOF MOTORS

Frame	Poles	Drive end bearing	Non-drive bearing
C112	All	6306	6205
C132	All	6308	6206
C160	All	6310	6307
C180	All	6312	6309
C200	2	6313	6310
C200	4 & UP	6314	6310
C225	2	6313	6312
C225	4 & UP	6316	6312
C250	2	6314	6312
C250	4 & UP	6318	6312
C280	2	6314	6314
C280	4 & UP	NU318	6314
C315	2	NU315M	NU315M & 6315
C315	4 & UP	NU320M	6318
C315XL	4 & UP	NU320M	6318

Bearings are normally C3 internal clearance.

NOMENCLATURE KEY FOR NEWMAN FRAME REFERENCES

These are additional to any B.S.D. or NEMA Frame References.

(1) 1st LETTER INDICATES ENCLOSURE & MECHANICAL TYPE	(2) 2nd LETTER INDICATES ELECTRICAL TYPE	(3) 1st & 2nd FIGURES INDICATE FRAME SIZE	(4) 3rd FIGURE INDICATES CORE LENGTH	(5) 4th FIGURE INDICATES NO. OF POLES	(6) 3rd LETTER INDICATES MOUNTING
T - Totally Enclosed Cast Frame E - Totally Enclosed Cast Frame, Fan Cooled X - Totally Enclosed Cast Frame, Flameproof F - Totally Enclosed Cast Frame, Fan Cooled, Flameproof A - Totally Enclosed Steel Frame (FHP) R - Dripproof Steel Frame (66 FHP) B - Totally Enclosed Steel Frame, Fan Cooled M- Totally Enclosed Steel Frame, Flameproof N -Totally Enclosed Steel Frame, Fan Cooled, Flameproof L - Loom Motor Z - Stator/Rotor Unit Standard H - Stator/Rotor Hermetically Sealed D - Dripproof S - Screen Protected P - Pipe Ventilated Y - Totally Enclosed (Blow Through) K - Splash Proof J - Totally Enclosed Double Air Circuit O - Ordnance Stores Motor ADOF/E Specification-EL6 Category 'B' G - Gasworks Type (Fan Cooled) V - Gasworks Type (Nat. Cooled) W- Gasworks Type (Fan Cooled Double Air Circuit) U - Forced Vent (P.V.) C - Ribbed Frame Blow Over Dripproof	A - Alternator (Standard) C - Squirrel Cage (Single Cage) D - Squirrel Cage (Double Cage) W - Wound Rotor (Without S.C. Gear) R - Wound Rotor (With S.C. Gear) K - Single Phase, Cap. Start T - Single Phase, Cap. Start and Cap. Run, Direct-on-line Starting. S - Single Phase, Split Phase G - DC Generator M - DC Motor B - Alternator (Sinewave) H - Squirrel Cage (High Tension) N - High Tension Slip Ring without S.C. Gear V - High Tension Slip Ring with S.C. Gear X - Synchronous Y - Synchronous Reluctance Type P - Permanent Capacitor Z - Alternator P.M. L - Single Phase Series/ Parallel Starting Cap. Start Q - Single Phase Series/ Parallel Starting Cap Start and Cap. Run.	Figures used equal the nearest number of half inches above the actual ref. dimension. For AC machines the reference dimension is the O/D stator. For DC machines it is the O/D armature; e.g.: 08=4" 44=22"	0) 1) 2) Short Cores 3) 4) 5) Intermediate Cores 6) 7) 8) Long Cores 9) In the event of number of core lengths in a given frame size exceeding the 10 digits given above a letter selected from the following is used. A E K N R T V W X	Figures 1 and about equal number of pole pairs; e.g.: 1 = 2 Pole (3000 rpm) 4 = 8 Pole (750 rpm) For multi-speed machines use a multiple reference; e.g.: 2/4/6 Poles = 1/2/3	B - Foot (Base) F - Flange S - Skirt R - Resilient T - Resilient (with Belt Tension Device) P - Vertical Hollow Shaft L - Lug Mounted H - Hinge Mounting C - Mounting to Customers Special Requirements D - Foot & Flange (NEMA 'D') K - Face Mounted M - Foot & Face (NEMA 'C') A - Pad Mounting X - Vertical Solid Shaft, Heavy Thrust V - Vertical Solid Shaft, Normal Thrust U - Double Flange Double Shaft with Feet W - With Resilient Mounting but no Feet O - Oil Burner Flange
	(7) 4th LETTER INDICATES BEARINGS		(8) ADDITIONAL SYMBOL USED IN CERTAIN CASES		
	B - Ball & Ball T - Roller & Roller R - Ball & Roller S - Sleeve C - Bearings to Customers Special Requirements V - Ball & Sleeve D - Ball/Roller & Roller		E - Encapsulated Z - NEMA Class B motors A - Axially ventilated NEMA 1964 Series and B.S. Metric O - Special flanged stator mounting for Omnimill motor TC14 only.		

EASA Technical Manual © 1996-2012, Electrical Apparatus Service Association, Inc.

PEERLESS-WINSMITH, INC.

DATE CODES

The month code precedes the year code. Sometimes the date code precedes the serial number. At other times it follows the type and model number. In either case it appears in the serial number block on the nameplate.

1950 TO 1972

January - A	July - G	1950 - A	1956 - G	1962 - N	1968 - V
February - B	August - H	1951 - B	1957 - H	1963 - P	1969 - W
March - C	September - J	1952 - C	1958 - J	1964 - R	1970 - X
April - D	October - K	1953 - D	1959 - K	1965 - S	1971 - Y
May - E	November - L	1954 - E	1960 - L	1966 - T	1972 - Z
June - F	December - M	1955 - F	1961 - M	1967 - U	

1973 TO 1995

January - N	July - U	1973 - A	1979 - G	1985 - N	1991 - V
February - P	August - V	1974 - B	1980 - H	1986 - P	1992 - W
March - Q	September - W	1975 - C	1981 - J	1987 - R	1993 - X
April - R	October - X	1976 - D	1982 - K	1988 - S	1994 - Y
May - S	November - Y	1977 - E	1983 - L	1989 - T	1995 - Z
June - T	December - Z	1978 - F	1984 - M	1990 - U	

1996 TO 2018

January - A	July - G	1996 - A	2002 - G	2008 - N	2014 - V
February - B	August - H	1997 - B	2003 - H	2009 - P	2015 - W
March - C	September - J	1998 - C	2004 - J	2010 - R	2016 - X
April - D	October - K	1999 - D	2005 - K	2011 - S	2017 - Y
May - E	November - L	2000 - E	2006 - L	2012 - T	2018 - Z
June - F	December - M	2001 - F	2007 - M	2013 - U	

EXAMPLES

SJ42865 Motor serial number. Prefix letter “S” indicates May. Prefix letter “J” indicates 1981.

P9065VT Motor model number. Prefix letter “P” indicates polyphase motor. Suffix letter “V” indicates August. Suffix letter “T” indicates 1989.

C2135NA Motor model number. Prefix letter “C” indicates capacitor motor. Suffix letter “N” indicates January. Suffix letter “A” indicates 1973.

R1987PD Motor model number. Prefix letter “R” indicates repulsion-induction motor. Suffix letter “P” indicates February. Suffix letter “D” indicates 1976.

D2696ZY Motor model number. Prefix letter “D” indicates direct current motor. Suffix letter “Z” indicates December. Suffix letter “Y” indicates 1994.

POPE ELECTRIC MOTORS

(Out of business)

BEARING INFORMATION

Frame	Poles	Grease valve	Drive bearing	Non-drive bearing
D80	2 - 6	NO	6204Z*	6203Z
D80	2 - 6	YES	NU204	6203
D90	2 - 6	NO	6205Z*	6204Z
D90	2 - 8	YES	NU205	6204
D100	2 - 8	NO	6206Z*	6205Z
D100	2 - 8	YES	NU206	6205
D112	2 - 8	NO	6306	6206
D112	2 - 8	YES	NU306	6206
D132	2 - 8	NO	6208	6206
D132	2 - 8	YES	NU208	6206
D160	2 - 8	NO	6309Z	6308Z*
D160	2 - 8	YES	NU309	6308
D180	2 - 8	NO	6310Z	6309Z*
D180	2 - 8	YES	NU310	6309
D200	2 - 8	NO	6312Z	6310Z*
D200	2 - 8	YES	NU312	6310
D225	2 - 8	NO	6314Z	6312Z*
D225	2 - 8	YES	NU314	6312
D250	2 - 8	YES	NU315C3	6315C3
D280	2 - 8	YES	NU317C3	6317C3
D315	2 - 8	YES	NU318C3	6318C3
D355	2	YES	NU318C3	6318C3
D355	4 - 8	YES	NU326C3	6326C3

* Preload washer

EASA Technical Manual © 1996-2012, Electrical Apparatus Service Association, Inc.

RELIANCE ELECTRIC CO.

(Now part of Baldor Electric Co.)

DATE CODE

Date codes of Reliance motors are found after the model, serial or identification number on the nameplate. The month letter is first, followed by the year letter.

The code from 1951 to 1974 is as follows:

A - January	A - 1951	N - 1963
B - February	B - 1952	P - 1964
C - March	C - 1953	Q - 1965
D - April	D - 1954	R - 1966
E - May	E - 1955	S - 1967
F - June	F - 1956	T - 1968
G - July	G - 1957	U - 1969
H - August	H - 1958	V - 1970
J - September	J - 1959	W - 1971
K - October	K - 1960	X - 1972
L - November	L - 1961	Y - 1973
M - December	M - 1962	Z - 1974

The code from 1975 to 1997 is as follows:

N - January	A - 1975	N - 1987
P - February	B - 1976	P - 1988
Q - March	C - 1977	Q - 1989
R - April	D - 1978	R - 1990
S - May	E - 1979	S - 1991
T - June	F - 1980	T - 1992
U - July	G - 1981	U - 1993
V - August	H - 1982	W - 1994
W - September	J - 1983	X - 1995
X - October	K - 1984	Y - 1996
Y - November	L - 1985	Z - 1997
Z - December	M - 1986	

The code from 1998 to 2020 is as follows:

A - January	A - 1998	N - 2010
B - February	B - 1999	P - 2011
C - March	C - 2000	R - 2012
D - April	D - 2001	S - 2013
E - May	E - 2002	T - 2014
F - June	F - 2003	U - 2015
G - July	G - 2004	V - 2016
H - August	H - 2005	W - 2017
J - September	J - 2006	X - 2018
K - October	K - 2007	Y - 2019
L - November	L - 2008	Z - 2020
M - December	M - 2009	

TYPE DESIGNATIONS

Polyphase - single speed	P, A, AA, PS
Polyphase - multispeed	PM, AA, M
Capacitor - start	CS
Capacitor - start, quick reversing	CP, CR
Capacitor - start, instant reversing	CU, CT
Two-value capacitor	CH, CT
Permanent - split capacitor	CL, CM, CP
DC motors and generators	T
Wound rotor	SR, W
Reluctance - type synchronous polyphase	PR, SM
Reluctance - type synchronous capacitor start	CSR, SC

BEARING INFORMATION

STANDARD HORIZONTAL MOTORS

AC motors		Front end		Back end	
Frame size	No. of poles	AFBMA size	AFBMA No.	AFBMA size	AFBMA No.
140T	ALL	203SFF	17BCO2XPP30A26	205SFF	25BC02XPP30A26
180T	ALL	205	25BC02JGG30A26	206	30BC02JGG30A26
210T	ALL	206	30BC02JGG30A26	207	35BC02JGG30A26
250T	ALL	309	45BC03XP30X26	309	45BC03XP30X26
280T	ALL	310	50BC03XP30X26	310	50BC03XP30X26
320T	ALL	311	55BC03XP30X26	311	55BC03XP30X26
360T	ALL	313	65BC03X30X26	313	65BC03X30X26
400TS	2	313	65BC03X30X26	313	65BC03X30X26
400T	4 & More	316	80BC03X30X26	316	80BC03X30X26
440TS	2	313	65BC03X30X26	313	65BC03X30X26
440T	4 & More	318	90BC03X30X26	318	90BC03X30X26
445 TS 447	2	313	65BC03X30X26	313	65BC03X30X26
T 449	4 & MORE	318	90BC03X30X26	NU222	11ORU02M30X26

400 & 440 frame 2-pole FC, XT & XE motors using standard brackets, starting with date code VH, are being supplied with 313 bearings (for questions regarding “standard brackets” please contact product marketing). Prior to date code VH 213 bearings were supplied.

HORIZONTAL XT AC MOTORS

AC motors		Front end		Back end	
Frame size	No. of poles	AFBMA size	AFBMA No.	AFBMA size	AFBMA No.
XE 140T	ALL	205	25BC02X30X26	205	25BC02X30X26
SXT-140T	ALL	203SFF	17BC02XPP30A26	205SFF	25BC02XPP30A26
180T	ALL	205	25BC02X30X26	206	30BC20X30X26
210T	ALL	206	30BC02X30X26	207	35BC02X30X26
250T	ALL	309	45BC03X30X26	309	45BC03X30X26
280T	ALL	310	50BC03X30X26	310	50BC03X30X26
320T	ALL	311	55BC03X30X26	311	55BC03X30X26
360T	ALL	313	65BC03X30X26	313	65BC03X30X26
400TS	2	313	65BC03X30X26	313	65BC03X30X26
400T	4 & More	316	80BC03X30X26	316	80BC03X30X26
440TS	2	313	65BC03X30X26	313	65BC03X30X26
445 TS 447	2	313	65BC03X30X26	313	65BC03X30X26
T 449	4 & MORE	318	90BC03X30X26	NU222	11ORU02M30X26

400 & 440 frame 2-pole FC, XT & XE motors using standard brackets, starting with date code VH, are being supplied with 313 bearings (for questions regarding “standard brackets” please contact product marketing). Prior to date code VH 213 bearings were supplied.

EASA Technical Manual © 1996-2012, Electrical Apparatus Service Association, Inc.

BEARING INFORMATION—CONTINUED

VERTICAL P-BASE
HP NORMAL THRUST
TEFC AND TEFC-XT BEARING SIZES

AC motors		Front end		Back end	
Frame size	No. of poles	AFBMA size	AFBMA No.	AFBMA size	AFBMA No.
180 Non-XT 180XT	ALL	205	25BC02JPP30X26 25BC02J30X26	210	50BC02JP30X26 50BC02J30X26
210 Non-XT 210 XT	ALL	206	30BC02JPP30X26 30BC02J30X26	211	55BC02JPP30X26 55BC02J30X26
250	ALL	309	45BC03X30X26	309	45BC03X30X26
280	ALL	310	50BC03X30X26	310	50BC03X30X26
320	ALL	311	55BC03X30X26	311	55BC03X30X26
360	ALL	313	65BC03X30X26	313	65BC03X30X26
400	ALL	313	65BC03X30X26	313	65BC03X30X26
440	ALL	313	65BC03X30X26	313	65BC03X30X26

EXPLOSION-PROOF ENCLOSURE

AC motors		Front end		Back end	
Frame size	No. of poles	AFBMA size	AFBMA No.	AFBMA size	AFBMA No.
180 Non-XT 180XT	ALL	205	25BC02JPP30X26 25BC02J30X26	210	50BC02JP30X26 50BC02J30X26
210 Non-XT 210 XT	ALL	206	30BC02JPP30X26 30BC02J30X26	211	55BC02JPP30X26 55BC02J30X26
250	ALL	309	45BC03XPP30A26	311	55BC03XPP30A26
280	ALL	310	50BC03XPP30A26	312	60BC03XPP30A26
320	ALL	311	55BC03XPP30A26	312	60BC03XPP30A26
360	ALL	313	65BCO3XPP30A26	312	60BC03XPP30A26
400	ALL	313	65BCO3XPP30A26	313	65BC03XPP30A26
440	ALL	313	65BC03XPP30A26	313	65BC03XPP30A26

EASA Technical Manual © 1996-2012, Electrical Apparatus Service Association, Inc.

BEARING INFORMATION—CONTINUED

PROTECTED ENCLOSURE

AC motors		Front end		Back end	
Frame size	No. of poles	AFBMA size	AFBMA No.	AFBMA size	AFBMA No.
180			Not available		
210			Not available		
250	ALL	309	45BC03X30X26	311	55BC03X30X26
280	ALL	310	50BC03X30X26	312	60BC03X30X26
320	ALL	311	55BC03X30X26	312	60BC03X30X26
360	ALL	313	65BC03X30X26	312	60BC03X30X26
400	1800 & slower	313	65BC03X30X26	313	65BC03X30X26
440	1800 & slower	313	65BC03X30X26	313	65BC03X30X26

VERTICAL P-BASE IN-LINE
LP MEDIUM THRUST
TEFC AND TEFC-XT ENCLOSURES

AC motors		Front end		Back end	
Frame size	No. of poles	AFBMA size	AFBMA No.	AFBMA size	AFBMA No.
180 Non-XT 180XT	ALL	305	25BTO3YR00X28 25BTO3YR00X28	210	50BC02J30X26 50BC02J30X26
210 Non-XT 210 XT	ALL	306	30BTO3YR00X28 30YBT03YR00X28	211	55BC02JPP30X26 55BC02J30X26
250	ALL	308	40BT03JR00X26	309	45BC03XP30X26
280	ALL	309	45BT03JR00X26	212	60BC03XP30X26
320	ALL	309	45BT03JR00X26	212	60BC03XP30X26
360	ALL	310	50BT03JR00X26	313	65BC03XP30X26
400	ALL	310	50BT03JR00X26	313	65BC03XP30X26
440	ALL	310	50BT03JR030X26	313	65BC03XP30X26

EASA Technical Manual © 1996-2012, Electrical Apparatus Service Association, Inc.

BEARING INFORMATION—CONTINUED

EXPLOSION-PROOF ENCLOSURE BEARING SIZES

AC motors		Front end		Back end	
Frame size	No. of poles	AFBMA size	AFBMA No.	AFBMA size	AFBMA No.
180 Non-XT	ALL	305	25BT03YR00X28	210	50BC02J30X26
180XT			25BT03YR00X28		50BC02J30X26
210 Non-XT	ALL	306	30BT03YR00X28	211	55BC02J30X26
210 XT			30BT03YR00X28		55BC02J30X26
250	ALL	308	40BT03JR00X26	309	45BC03XP30X26
280	ALL	309	45BT03JR00X26	312	60BC03XP30X26
320	ALL	309	45BT03JR00X26	312	60BC03XP30X26
360	ALL	310	50BT03JR00X26	313	65BC03XP30X26
400	ALL	310	50BT03JR00X26	313	65BC03XP30X26
440	ALL	310	50BC03JR00X26	313	65BC03XP30X26

VERTICAL P-BASE IN-LINE
LP EXTENDED THRUSH
TEFC, TEFC-XT AND XP EXPLOSION-PROOF ENCLOSURES

AC motors		Front end		Back end	
Frame size	No. of poles	AFBMA size	AFBMA No.	AFBMA size	AFBMA No.
400	ALL	314	70BT03JR00X26	313	65BC03X30X26
440	ALL	314	70BT03JR00X26	313	65BC03X30X26

EASA Technical Manual © 1996-2012, Electrical Apparatus Service Association, Inc.

REULAND ELECTRIC CO.

DATE CODES

First two digits in serial number indicate the year of manufacture. Example: 80-1234A-1 was manufactured in 1980.

TYPE DESIGNATIONS

See next page for “Type and Frame Style Code.”

EASA Technical Manual © 1996-2012, Electrical Apparatus Service Association, Inc.

TYPE AND FRAME STYLE CODE

TYPE

( ) ( ) ( ) ( )

BASIC DESCRIPTION - SERIES

	MOTORS
A	FOOT MOUNTED
B	FOOT MOUNTED - FACE OR FLANGE
C	FOOTLESS FACE OR FLANGE
D	HYD STRAIGHT SHAFT PUMP - FOOT MOUNT - SPLINE DESIGN
E	HYD STRAIGHT SHAFT PUMP - FOOTLESS - SPLINE DESIGN
F	HYD TANG OR SPLINE SHAFT PUMP - FOOTMOUNT
W	HYD GEAR COUPLING PUMP - FOOTMOUNT
Y	HYD STRAIGHT SHAFT PUMP - FOOTMOUNT - MAG COUPLING
V	VERTICAL PUMP MOTOR - SOLID OR HOLLOWSHAFT
P	PARTIAL MOTOR
	MOTOREDUCERS
G	SINGLE WORM
H	SINGLE WORM - BRAKE ON GEARCASE
J	HELICAL WORM
K	HELICAL WORM - BRAKE ON GEARCASE
L	DOUBLE REDUCTION HELICAL - BRAKE ON GEARCASE
R	HELICAL SINGLE REDUCTION
S	HELICAL DOUBLE REDUCTION
M	HELICAL WORM - RE/EURODRIVE
N	HELICAL WORM - BRAKE ON GEARCASE - RE/ EURODRIVE
T	HELICAL SINGLE, DOUBLE, TRIPLE REDUCTION - RE/ EURODRIVE

ACCESSORIES

A	A BRAKE - OUTPUT END
B	B BRAKE - OUTPUT END
C	C BRAKE - OUTPUT END
D	C-2 BRAKE - OUTPUT END
F	61 SHCF FLUID COUPLING
G	71 SHCF FLUID COUPLING
H	72 HCF FLUID COUPLING
J	82 HCF FLUID COUPLING
K	92 HCF FLUID COUPLING
L	L BRAKE OUTPUT END OF MOTOR
M	61 SHCF FLUID COUPLING AND 'A' BRAKE
N	71 SHCF FLUID COUPLING AND 'A' BRAKE
P	72 HCF FLUID COUPLING AND 'A' BRAKE
Q	82 HCF FLUID COUPLING AND 'A' BRAKE
Y	82 HCF FLUID COUPLING AND 'B' BRAKE
R	92 HCF FLUID COUPLING AND 'A' BRAKE
S	92 HCF FLUID COUPLING AND 'B' BRAKE
T	92 HCF FLUID COUPLING AND 'C' BRAKE
V	VERT PUMP MOTOR - SELF RELEASE COUPLING
W	VERT PUMP MOTOR - NON REVERSE COUPLING
2	61 SHCF FLUID COUPLING & L BRAKE OUTPUT*
3	71 SHCF FLUID COUPLING & L BRAKE OUTPUT*
4	72 HCF FLUID COUPLING & L BRAKE OUTPUT *
5	82 HCF FLUID COUPLING & L BRAKE OUTPUT*
6	92 HCF FLUID COUPLING & L BRAKE OUTPUT
X	'D' UNITS 18 FR'S EXCEPT FLUIDS WITH OR WITHOUT BRAKES

MOUNTING

	MOTORS
M	HOLLOWSHAFT - P BASE - VERT PUMP MOTOR
N	SOLID SHAFT - P BASE - VERT PUMP MOTOR
S	NEMA C FACE ON OUTPUT
T	NEMA D FLANGE ON OUTPUT
V	CONE GEAR UNIT MOUNTING
W	WESTERN GEAR UNIT MOUNTING
	MOTOREDUCERS - SOLID SHAFT
A	FEET ON GEARCASE - SINGLE OUTPUT SHAFT
B	FEET ON GEARCASE - DOUBLE OUTPUT SHAFT
C	FEET ON MOTOR FRAME - SINGLE OUTPUT SHAFT
D	FEET ON MOTOR FRAME - DOUBLE OUTPUT SHAFT
E	RING BASE FLANGE MTG - FOOTLESS GEARCASE
F	FLANGE BASE MTG - FOOTLESS GEARCASE
P	FACE MOUNT - FOOTLESS GEARCASE
V	MINI FLANGE MTG - FOOTLESS GEARCASE
	MOTOREDUCERS - HOLLOWSHAFT
G	TORQUE ARM MTD FTLESS GCASE (PADDLE OR BALL ROD)
H	FEET ON GEARCASE
J	RING BASE FLANGE MTG - HOLLOWSHAFT FTLESS
K	FLANGE BASE MTG - FOOTLESS GEARCASE
L	FEET ON MOTOR FRAME
Q	BALL ROD MOUNT
R	SPRING ROD MOUNT
Z	MINI-FLANGE MOUNTING-FOOTLESS GEARCASE
U	FLANGE MOUNT - FEET ON GEARCASE

SIZE

	SINGLE HELICAL
A	SIZE RE GEAR
B	SIZE RE GEAR
70	EURODRIVE
80	EURODRIVE
90	EURODRIVE
100	EURODRIVE
	DOUBLE HELICAL
D	SIZE RE GEAR
E	SIZE RE GEAR
70	EURODRIVE
80	EURODRIVE
90	EURODRIVE
100	EURODRIVE
120	EURODRIVE
150	EURODRIVE
	DOUBLE HELICAL
G	SIZE RE VERSA DRIVE
R	SIZE RE VERSA DRIVE
	TRIPLE HELICAL
70	EURODRIVE
80	EURODRIVE
90	EURODRIVE
100	EURODRIVE
120	EURODRIVE
140	EURODRIVE
160	EURODRIVE
	TRIPLE HELICAL
QB	SIZE RE VERSA DRIVE
RB	SIZE RE VERSA DRIVE
	SINGLE WORM
W	SHELL WORM - (184 & 21 FRAME)
W1	SHELL WORM - (66 FRAME)
W2	SHELL WORM - (20, 22, 25 FRAME)
W3	SHELL WORM - (182 FRAME)
V	CUT ON WORM - RE
	HELICAL WORM
H	RE SIZE HW-3
K	RE SIZE HW-4
L	EURODRIVE SIZE HW-5
M	EURODRIVE SIZE HW-6
100	EURODRIVE SIZE S100
120	EURODRIVE SIZE S120
X	CUSTOM MOTOREDUCERS

STYLE

( ) ( )

ENCLOSURE

	VENTILATED
V	DRIPPROOF
W	DRIPPROOF WITH CANOPY OR DRIP COVER
S	SPLASH PROOF - SANITARY
	TOTALLY ENCLOSED
E	NON VENTILATED
F	FAN COOLED - EXTERNAL
G	FAN COOLED - EXTERNAL - TEXTILE TYPE
T	NON VENTILATED - SANITARY
	AUXILIARY COOLED
M	INTERNALLY COOLED (DRIPPROOF)
N	EXTERNALLY COOLED (FAN COOLED)

FRONT END ADAPTATIONS

	BRAKE MOUNT
A	A BRAKE MOTOR MOUNTED
B	B BRAKE MOTOR MOUNTED
C	C BRAKE MOTOR MOUNTED
D	C-2 BRAKE MOTOR MOUNTED
L	L BRAKE MOTOR MOUNTED
	HYDRAULIC MOUNT
E	HYD STRAIGHT SHAFT PUMP MOUNT - SPLINE DESIGN**
F	HYD TANG OR SPLINE SHAFT PUMP MOUNT**
W	HYD GEAR TYPE PUMP COUPLING
X	EXTRA RATED HYDRAULIC - (184 FRAME ONLY)
Y	HYD STRAIGHT SHAFT PUMP MOUNT - MAGNALOY DESIGN
	SHAFT EXTENSIONS
R	C FACE AND SHAFT EXT OR BUYOUT BRAKE MTG
S	DOUBLE END SHAFT EXTENSION - STRAIGHT
T	DOUBLE END SHAFT EXTENSION - TAPERED

TORQUE RATING

TO BE DETERMINED FROM RE CATALOG

W	L BRAKE - WATERTITE CONSTRUCTION
Z	EXTERNAL LEADS - A & B BRAKES

** "Y" (MAGNALOY DESIGN) MUST BE USED ON FAN END OF DOUBLE END, TEFC MOTORS

* NOT AVAILABLE AS INTERNAL BRAKE

BRAKE-TYPE

( ) ( ) ( ) - ( ) ( ) ( ) - ( )

BASIC ELECTRICAL

	POLYPHASE
A	SQUIRREL CAGE ROTOR
D	DUOCENTRIC ROTOR
F	ADJ SPEED DRIVE (FR (SEPARATE RES)
G	ADJ SPEED DR (FR) MOTOR MTD RES
W	WOUND ROTOR
X	EXTRA RATED HYD PUMP (18 FR ONLY)
	SINGLE PHASE
R	REPULSION INDUCTION
S	CAPACITOR START (CONDENSER RELAY)

SIZE

OL	L BRAKE
OA	A BRAKE
OB	B BRAKE'
OC	C BRAKE
OD	C2 BRAKE
OV	CUTLER HAMMER SHOE TYPE - S-55 SIZE
OW	CUTLER HAMMER SHOE TYPE - S-7 SIZE
OX	CUTLER HAMMER SHOE TYPE - S-10 SIZE
OY	WHITING SHOE TYPE -8SR SIZE (324U & LARGER)

MOUNTING

	FACE MOUNTED
C	NON ADJUSTABLE TORQUE - STANDARD
D	ADJUSTABLE TORQUE
B	FRACTIONAL C FACE - NON ADJUSTABLE TORQUE
E	FRACTIONAL C FACE - ADJUSTABLE TORQUE
	FOOT MOUNTED
F	NON-ADJUSTABLE TORQUE STANDARD
G	ADJUSTABLE TORQUE

STYLE

	NO BEARINGS
A	STANDARD COVER
K	THROUGH SHAFT
H	HOLLOWSHAFT
J	INTERNAL BRAKE (D, HW-3 & HW-4 GEARS)
R	SHOE BRAKE MOUNTING (18-25U FRAMES)
S	SHOE BRAKE MOUNTING (28U FRAMES)
T	SHOE BRAKE MOUNTING (32U-36U FRAMES)
	ONE BEARING OUTPUT
L	THROUGH SHAFT
	TWO BEARINGS
M	SINGLE END OUTPUT SHAFT
N	DOUBLE END OUTPUT SHAFT

ROBBINS & MYERS

DATE CODES

Date code is year letter followed by month letter.

1950 - A	1961 - M	1972 - Y
1951 - B	1962 - N	1973 - Z
1952 - C	1963 - P	1974 - A
1953 - D	1964 - Q	1975 - B
1954 - E	1965 - R	1976 - C
1955 - F	1966 - S	1977 - D
1956 - G	1967 - T	1978 - E
1957 - H	1968 - U	1979 - F
1958 - J	1969 - V	1980 - G
1959 - K	1970 - W	1981 - H
1960 - L	1971 - X	

1950 - 1974

January - N	May - S	September - W
February - P	June - T	October - X
March - Q	July - U	November - Y
April - R	August - V	December - Z

1975 - 1981

January - A	May - E	September - J
February - B	June - F	October - K
March - C	July - G	November - L
April - D	August - H	December - M

The letter system, was discontinued after 1981. Since 1982, the date codes have consisted of the last two digits of the year (e.g., “87”) and two digits for the week of the year (e.g., “01”, “10”, and so forth). For example, “8701” represents the first week of 1987.

TYPE DESIGNATIONS

Polyphase	L, LH
Permanent split capacitor	KP
Split phase	KS
Capacitor start	KL
Capacitor start/capacitor run	KK
Brushless DC	BDC
Gearmotors	G7 G8 HD FH FM HG MD8 XE FS

EASA Technical Manual © 1996-2012, Electrical Apparatus Service Association, Inc.

BEARING INFORMATION

FRACTIONAL HORSEPOWER

Frame	Type	Front bearing	Drive bearing
80	AC	FAF200PP	FAF200PP
80	AC	SKF6200-A2RS	SKF6200-A2RS
100	AC	38VT-FAF	201T-FAF
120	AC	200T-FAF	202T-FAF
140	AC	FL-12-SKF	FL-17-SKF
160	AC	203T-FAF	205T-FAF
180	AC	FL-20-SKF	FL-25-SKF
42	DC	SKF-R8A2RS	FAF201PP
42	DC	SKF-R8A2RS	6201-A2RS
42	AC	SKF-8A2RS	FAF201PP
42	AC	SKF-8A2RS	6201-A2RS
48	AC	FAF200PP	FAF202PP
48	AC	SKF-6200-A2RS	SKF-6202-A2RS
56	DC	FAF201PP	FAF203PP
56	DC	SKF-6201-A2RS	SKF-6203-A2RS
56	AC	FAF201PP	FAF203PP
56	AC	SKF-6201-A2RS	AKF-6203-A2RS
66	DC	FAF204PP	FAF205-A2RS
66	DC	SKF-6204-A2RS	SKF-6205-A2RS
66	AC	FAF203PP	FAF205PP
66	AC	SKF-6203-A2RS	SKF-6205-A2RS

INTEGRAL HORSEPOWER

Frame	Front bearing	Drive bearing
203	S3604	S3604
204	S3604	S3604
224	S3606	S3606
225	S3606	S3606
254	S3606	S3606
284	S3607	S3607
324	S3609	S3609
326	S3609	S3609
364	S3610	S3610
365	S3610	S3610
404	S3612	S3612
405	S3612	S3612
444	S3615	S3615
445	S3615	S3615
504	S3618	S3618
505	S3618	S3618

EASA Technical Manual © 1996-2012, Electrical Apparatus Service Association, Inc.

BEARING INFORMATION—CONTINUED

JET PUMP MOTORS

Frame	Horsepower	rpm	Front bearing	Drive bearing
KL203	1 1/2	3450	3604NH	55604ND
KL204	1 1/2	1725	3604NH	55604ND
KL204	2	3450	3604NH	55604ND
KL224	2	1725	3606NH	55606ND
KL224	3	3450	3606NH	55606ND
KL225	3	1725	3606NH	55606ND
KL225	5	3450	3606NH	55606ND
KL254	5	1725	3606NH	55606ND
KL254	7 1/2	3450	3606NH	55606ND
KL284	7 1/2	1725	3607NH	55607ND
L284	10	3450	3607NH	55607ND
L324	10	1725	3609NH	55609ND
L324	15	3450	3609NH	55609ND

BRUSHLESS DC MOTORS

Frame	Horsepower	rpm	Front bearing	Drive bearing
26	1/2	5000	608ZZ	608ZZ
29	3/4	5000	608ZZ	608ZZ
33	1	5000	608ZZ	608ZZ

EASA Technical Manual © 1996-2012, Electrical Apparatus Service Association, Inc.

RONK ELECTRICAL INDUSTRIES, SYSTEM ANALYZER DIV.

BEARING INFORMATION

T-FRAMES

Frame	Front bearing	Drive bearing
182-184	205	207
213-215	206	208
254-256	208	309
284-286	210	310
324-326	310	312

U-FRAMES

Frame	Front bearing	Drive bearing
182-184	204	205
213-215	206	206
254-256	208	208
284-286	210	210
324-326	310	310
364-365	313	313
404-405	314	314
444-445	315	315

ORIGINAL NEMA FRAMES

Frame	Front bearing	Drive bearing
203	204	204
204	205	205
224-225	205	206
254	205	206
284	208	208
324-326	208	210
364-365	210	310
404-405	311	313
444-445	313	314

SEW-EURODRIVE, INC.

(Formerly Eurodrive, Inc.)

TYPE DESIGNATIONS

NOMENCLATURE—MODEL DESCRIPTION

The letter and number combinations are listed on the nameplate as the TYPE of unit. The nomenclature system describes a unit or option by starting at the output shaft and finishing at the input side (motor side).

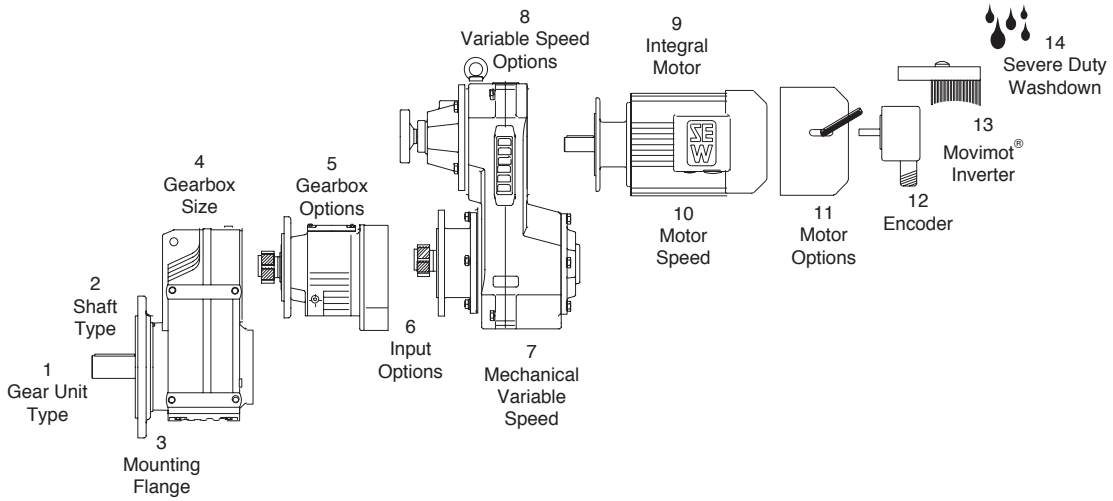

1	2	3	4	5	6	7	8	9	10	11	12	13	14

1. Gear Unit Type
   R - Helical
   F - The Snuggler®
   K - Bevel
   S - Worm
   W - Hypoid (Spiroplan®)

2. Shaft Type
   — - Soild
   A - Hollow
   H - Shrink disc
   V - Spline
   T - Hollow with tapered bushings

3. Mounting Flange
   F - B5 flange
   FF - B5 flange on both sides
   Z - B14 flange
   M - Agitator extension

4. Gearbox Size

5. Gearbox options
   R_ - Added gear reducer
   B - Rail holes (F box)
   B - Feet (KA box)
   F - Feet + flange (R box)
   T - Torque arm

6. Input Options

7. Mechanical Variable Speed
   D__ - Varimont® disc drive
   VU__ - Varigear® belt drive U-flow
   VZ__ - Varigear® belt drive Z-flow

8. Variable Speed Options

9. Integral Motor Type
   CT or CV - Asynchronous servo
   DT or DV - Standard AC induction
   SDT or SDV - 2 speed 40/100% duty
   DS or DY - Synchronous servo

10. Motor Speed (Poles)
    2, 4, 6, 8, 4/2, 8/4, 6/2, 8/2, 12/2

11. Motor Options

12. Encoder

13. Movimot® (Horsepower Code)

14. Severe Duty
    -KS - Severe duty

EASA Technical Manual © 1996-2012, Electrical Apparatus Service Association, Inc.

BEARING INFORMATION

The following bearings are used for the appropriate motor frame sizes.

Frame size	Driving end - Side A		Fan end - Side B
	Geared	Flanged and footed	Geared, flanged and footed
DT71-80	6303 C3-2RS	6204 C3-2RS	6203 C3-2RS
DT90-100	6306 C3-2RS	6306 C3-2RS	6205 C3-2RS
DV112-132S	6307 C3-2RS	6208 C3-2RS	6207 C3-2RS
DV132M/ML-160M	6309 C3-2Z	6309 C3-2Z	6209 C3-2Z
DV160L-180	6312 C3-2Z	6312 C3-2Z	6213 C3-2Z
DV200-225	6314 C3-2Z	6314 C3-2Z	6314 C3-2Z

SIEMENS, SIEMENS ALLIS INDUSTRIAL MOTOR DIV.

(Now Siemens Industry, Inc.)

DATE CODES

Motors manufactured at Little Rock and Norwood are date coded in the model number blank on the nameplate.

First digit	-	1 - Manufactured at Norwood
	-	6 - Manufactured at Little Rock
Second digit	-	Quarter of the year
Third digit	-	Last digit in year

Beginning with production in 1982 at Little Rock, coding changed to:

First 2 digits	-	Month of year (01-12)
Third digit	-	Last digit of year

After September 1, 1988, first the letter for the month, next two digits for the year. For example, B93 was manufactured February 1993.

A - January	E - May	J - September
B - February	F - June	K - October
C - March	G - July	L - November
D - April	H - August	M - December

On MEDALLION ONLY, 140-250 frames only, the code is located at beginning of serial number.

On ALL OTHER MOTORS the code is located in a separate box on nameplate as “Date Code.”

TYPE DESIGNATIONS

Non-ventilated	K
Non-ventilated, explosion-proof	KK
Marine service	M
Self-clean - textile motor	Q
Dripproof - T frame	RG
Textile motor	RL
NEMA Design C	T
Vertical motor	V
Splash-proof	WW
Wound rotor	Y
Fan-cooled	Z
Fan-cooled, explosion-proof	ZZ
Chemical	CH
C or D flange	F
Severe duty	SD
Premium efficiency	E

EASA Technical Manual © 1996-2012, Electrical Apparatus Service Association, Inc.

BEARING INFORMATION

STANDARD BEARINGS FOR NEMA FRAMES

HORIZONTAL MOTORS
OPEN DRIPPROOF AND EXPLOSION-PROOF

	Open dripproof Types RG1, RG				Explosion-proof Types RGZZSD, RGZZESD			
	Drive end		Opposite drive end		Drive end		Opposite drive end	
Frame	AFBMA No.	Size	AFBMA No.	Size	AFBMA No.	Size	AFBMA No.	Size
143T-145T	25BC02JEE3	205	25BC02JEE3	205	25BC02JPP3	205	25BC02JPP3	205
182-184T	30BC02JEE3	206	25BC02JEE3	205	30BC02JPP3	206	30BC02JPP3	206
213T-215T	40BC02JEE3	208	30BC02JEE3	206	40BC02JPP3	208	40BC02JPP3	208
254T-256T	45BC03JEE3	309	35BC02JEE3	207	45BC03JPP3	309	45BC03JPP3	309
284TS-286TS	55BC03JPP3	311	45BC02JPP3	209	50BC03JPP3	310	50BC03JPP3	310
284T-286T	55BC03JPP3	311	45BC02JPP3	209	50BC03JPP3	310	50BC03JPP3	310
324TS-326TS	60BC03JPP3	312	55BC03JPP3	311	60BC03JPP3	312	60BC03JPP3	312
324T-326T	60BC03JPP3	312	55BC03JPP3	311	60BC03JPP3	312	60BC03JPP3	312
364TS-365TS	70BC03JPP3	314	55BC03JPP3	311	70BC03JPP3	314	70BC03JPP3	314
364T-365T	70BC03JPP3	314	55BC03JPP3	311	70BC03JPP3	314	70BC03JPP3	314
404TS-405TS	65BC03JPP3	313	65BC03JPP3	313	80BC03JPP3	316	80BC03JPP3	316
404T-405T	80BC03JPP3	316	65BC03JPP3	313	80BC03JPP3	316	80BC03JPP3	316
444TS-445TS	65BC03JPP3	313	65BC03JPP3	313	80BC03JPP3	316	80BC03JPP3	316
444T-445T	90BC03JPP3	318	65BC03JPP3	313	90RU03MO	318	80BC03JPP3	316
447TS-449TS	65BC03JPP3	313	65BC03JPP3	313	80BC03JPP3	316	80BC03JPP3	316
447T-449T	90RU03MO	318	65BC03JPP3	313	100RU03MO	320	80BC03JPP3	316

BEARING INFORMATION—CONTINUED

STANDARD BEARINGS FOR NEMA FRAMES

HORIZONTAL MOTORS
TOTALLY-ENCLOSED, FAN-COOLED (TEFC), STANDARD DUTY, SEVERE DUTY

	TEFC-Standard duty Types RGZ				TEFC-Standard efficiency severe duty Types RGZSD				TEFC-Premium efficiency severe duty Types RGZASD			
	Drive end		Opposite drive end		Drive end		Opposite drive end		Drive end		Opposite drive end	
Frame	AFBMA No.	Size	AFBMA No.	Size	AFBMA No.	Size	AFBMA No.	Size	AFBMA No.	Size	AFBMA No.	Size
143T - 145T	25BC02JEE3	205	17BC02JEE3	203	25BC02JPP3	205	25BC02JPP3	205	25BC02JPP3	205	25BC02JPP3	205
182T - 184T	30BC02JEE3	206	20BC02JEE3	204	30BC02JPP3	206	30BC02JPP3	206	30BC02JPP3	206	30BC02JPP3	206
213T - 215T	40BC02JEE3	208	30BC02JEE3	206	40BC02JPP3	208	40BC02JPP3	208	40BC02JPP3	208	40BC02JPP3	208
254T - 256T	45BC02JEE3	209	40BC02JEE3	208	45BC03JPP3	309	45BC03JPP3	309	45BC03JPP3	309	45BC03JPP3	309
284TS - 286TS	50BC03JPP3	310	50BC02JPP3	210	50BC03JPP3	310	50BC02JPP3	210	50BC03JPP3	310	50BC03JPP3	310
284T - 286T	50BC03JPP3	310	50BC02JPP3	210	50BC03JPP3	310	50BC02JPP3	210	50BC03JPP3	310	50BC03JPP3	310
324TS - 326TS	60BC03JPP3	312	50BC02JPP3	210	60BC03JPP3	312	50BC02JPP3	210	60BC03JPP3	312	60BC03JPP3	312
324T - 326T	60BC03JPP3	312	50BC02JPP3	210	60BC03JPP3	312	50BC02JPP3	210	60BC03JPP3	312	60BC03JPP3	312
364TS - 365TS	70BC03JPP3	314	50BC02JPP3	210	70BC03JPP3	314	50BC02JPP3	210	70BC03JPP3	314	70BC03JPP3	314
364T - 365T	70BC03JPP3	314	50BC02JPP3	210	70BC03JPP3	314	50BC02JPP3	210	70BC03JPP3	314	70BC03JPP3	314
404TS - 405TS	80BC03JPP3	316	80BC03JPP3	316	80BC03JPP3	316	80BC03JPP3	316	80BC03JPP3	316	80BC03JPP3	316
404T - 405T	80BC03JPP3	316	80BC03JPP3	316	80BC03JPP3	316	80BC03JPP3	316	80BC03JPP3	316	80BC03JPP3	316
444TS - 445TS	80BC03JPP3	316	80BC03JPP3	316	80BC03JPP3	316	80BC03JPP3	316	80BC03JPP3	316	80BC03JPP3	316
444T - 445T	90BCO3JPP3	318	80BC03JPP3	316	90RU03M0	318	80BC03JPP3	316	90RU03M0	318	80BC03JPP3	316
447TS - 449TS	80BC03JPP3	316	80BC03JPP3	316	80BC03JPP3	316	80BC03JPP3	316	80BC03JPP3	316	80BC03JPP3	316
447T - 449T	100RU03M0	320	80BC03JPP3	316	100RU03M0	320	80BC03JPP3	316	100RU03M0	320	80BC03JPP3	316

EASA Technical Manual © 1996-2012, Electrical Apparatus Service Association, Inc.

BEARING INFORMATION—CONTINUED

STANDARD BALL BEARINGS FOR NEMA FRAMES P BASE

VERTICAL MOTORS
TOTALLY-ENCLOSED, FAN-COOLED (TEFC) AND EXPLOSION-PROOF

Frame	Normal thrust Types RGZV, RGZZV				Medium thrust Types RGZV, RGZZV			
	Drive end		Opposite drive end		Drive end		Opposite drive end	
	AFBMA No.	Size	AFBMA No.	Size	AFBMA No.	Size	AFBMA No.	Size
143HP-145HP	30BC02JPP3	206	17BC02JEE3	203	30BT02XXXD0	206	17BC02JEE3	203
182HP-184HP	35BC02JPP3	207	20BC02JEE3	204	35BT02XXXD0	207	20BC02JEE3	204
213HP-215HP	35BC03JPP3	307	30BC02JEE3	206	35BT03XXXD0	307	30BC02JEE3	206
254HP-256HP	45BC03JPP3	309	40BC02JEE3	208	45BT03XXXD0	309	40BC02JEE3	208
284HP-286HP	45BC03JPP3	309	45BC02JPP3	209	45BT03XXXD0	309	45BC02JPP3	209
324HP-326HP	60BC03JPP3	312	55BC02JPP3	211	60BT03XXXD0	312	55BC02JPP3	211
364HP-365HP	65BC03JPP3	313	65BC03JPP3	313	65BT03XXXD0	313	65BC03JPP3	313
404HP-405HP	80BC03JPP3	316	80BC03JPP3	316	80BT03XXXD0	316	80BC03JPP3	316
444HP-445HP	90BC03JPP3	318	80BC03JPP3	316	90BT03XXXD0	318	80BC03JPP3	316

STANDARD BALL BEARINGS FOR NEMA FRAMES P BASE

VERTICAL MOTORS
TOTALLY-ENCLOSED, FAN-COOLED (TEFC) AND EXPLOSION-PROOF

Frame	Drive end		Opposite drive end		
	AFBMA No.	Size	AFBMA No.		Size
182LP-184LP	45BC03J3	309	35BT02JR	(duplex)	207
213LP-215LP	45BC03J3	309	35BT02JR	(duplex)	207
254LP-256LP	45BC03J3	309	40BT02JR	(duplex)	208
284LPH-286LPH	55BC03J3	311	45BT03JR	(duplex)	309
324LP-326LP	60BC03J3	312	55BT02JR	(duplex)	211
364LP-365LP	65BC03J3	313	60BT02JR	(duplex)	212
404LP-405LP	80BC03JPP3	316	55BT03JR	(duplex)	311
444LP-445LP	80BC03JPP3	316	55BT03JR	(duplex)	311

BEARING INFORMATION—CONTINUED

TYPES 1LA AND 1MA
HORIZONTAL

Frame	Poles	Drive bearing	Non-drive bearing
56	All	6001ZC3	6001ZC3
63	All	6001ZC3	6001ZC3
71	All	6202ZC3	6202ZC3
80	All	6004ZC3	6004ZC3
90	All	6205ZC3	6004ZC3
100L	All	6206ZC3	6205ZC3
112M	All	6206C3	6205C3
132	All	6208C3	6208C3
160	All	6209C3	6209C3
180	All	6210C3	6210C3
200L	All	6212C3	6212C3
225	All	6213C3	6213C3
250M	All	6215C3	6215C3
280S	2	6216C3	6216C3
280M	4 - 8	6317C3	6317C3
315S	2	6217C3	6217C3
315M	4 - 8	6319C3	6319C3
315L	2	6217C3	6217C3
315L	4 - 8	6319C3	6319C3
355L	2	NU217	NU217 & 6217C3
355L	4 - 8	6322C3	6322C3
400L	2	NU217	NU217 & 6217C3
400L	4 - 8	6324C3	6324C3

TYPES 1LA AND 1MA
VERTICAL

Frame	Poles	Drive bearing	Non-drive bearing
315L	2	NU217	7217B
315L	4 - 8	6319C3	6319C3
355L	2	NU217	7217B
355L	4 - 8	6322C3	6322C3
400L	2	NU217	7217B
400L	4 - 8	NU324	7324B

EASA Technical Manual © 1996-2012, Electrical Apparatus Service Association, Inc.

BEARING INFORMATION—CONTINUED

TYPE 1MJ
HORIZONTAL

Frame	Poles	Drive bearing	Non-drive bearing
71	All	6202ZC3	6202ZC3
80	All	6004ZC3	6004ZC3
90L	All	6205ZC3	6205ZC3
100L	All	6206ZC3	6206ZC3
112M	All	6306ZC3	6306ZC3
132	All	6308ZC3	6308ZC3
160	All	6309ZC3	6309ZC3
180	All	6210C3	6210C3
200L	All	6212C3	6212C3
225	All	6213C3	6213C3
250M	All	6215C3	6215C3
280	All	NU216	6216C3
315S	2	NU217	6217C3
315M	4 - 8	NU218	6218C3
315M/1	6 & 8	NU317	6317C3
315L	2	6316C3	6316C3
315L	4	NU317	6317C3
355S	2	6316C3	NU316C3
355S	4 - 8	6316C3	NU316
355M	2	6316C3	NU316C3
355M	4	6316C3	NU316
355M	6 & 8	NU222EJ	6316C3
355L	2	6316C3	NU316C3
355L	4 - 8	NU222EJ	6316C3

TYPE 1JA
VERTICAL

Frame	Poles	Drive bearing	Non-drive bearing
315M/1	6 - 8	NU317	6317C3
315L	2	6316C3	6316C3
315L	4	NU317	6317C3
355S	All	NU316	6316C3 & 7316B
355M	2 & 4	NU316	6316C3 & 7316B
355M	6 & 8	NU222EJ	6316C3 & 7316B
355L	2	NU316	6316C3 & 7316B
355L	4 - 8	NU222EJ	6316C3 & 7316B

STERLING ELECTRIC, INC.

DATE CODES

For "U" frames, serial numbers are preceded by a letter or numbers designating year of manufacture.

F - 1950	L - 1955	T - 1960	5A - 1965	0B - 1970	75 - 1975	80 - 1980
G - 1951	N - 1956	V - 1961	6A - 1966	71 - 1971	76 - 1976	81 - 1981
H - 1952	P - 1957	W - 1962	7A - 1967	72 - 1972	77 - 1977	82 - 1982
J - 1953	R - 1958	Y - 1963	8A - 1968	73 - 1973	78 - 1978	
K - 1954	S - 1959	4A - 1964	9A - 1969	74 - 1974	79 - 1979	

For "T" frames, two numbers for month and two more numbers for last two digits of year follow a letter designating frequency and voltage; e.g., 83-1983, 84-1984, 85-1985, 86-1986, 87-1987.

BEARING INFORMATION

	Dripproof		TEFC	
Frame	Drive end	Opposite drive end	Drive end	Opposite drive end
145T	205	205	205	205
182T	306	206	306	206
184T	306	206	306	206
213T	308	208	308	306
215T	308	208	308	306
254T	309	208	309	308
254T	309	208	310	308
256T	309	208	309	308
256T	309	208	310	308
284T	312	211	311	309
284T	312	211	310	210
284TS	311	211	311	309
284TS	311	211	310	210
286T	312	211	311	309
286T	312	211	310	210
286TS	311	211	311	309
286TS	311	211	310	210
324T	313	312	312	312
324T	313	312	312	212
324TS	312	312	312C3	312
324TS	312	312	312C3	212
326T	313	312	312	312
326T	313	312	312	212
326TS	312	312	312C3	312
364T	314	314	314	312
364T	314	314	NU215	312
364TS	313	313	312	312
365T	314	314	314	312
365T	314	314	NU215	312
365TS	313	313	312	312
404T	317	317	NU317	313
404T	317	317	NU218	313
404TS	313C3	313C3	313C3	313C3

EASA Technical Manual © 1996-2012, Electrical Apparatus Service Association, Inc.

BEARING INFORMATION—CONTINUED

Frame	Dripproof		TEFC	
	Drive end	Opposite drive end	Drive end	Opposite drive end
405T	NU317	NU317	NU317	313
405T	NU317	NU317	NU218	313
405TS	313C3	313C3	312C3	312C3
405TS	313C3	313C3	313C3	313C3
444T	NU318	318	NU318	318
44T	NU318	318	NU220	315
444TS	313C3	313C3	313C3	313C3
445T	NU318	318	NU318	318
445T	NU318	318	NU220	315
445TS	313C3	313C3	313C3	313C3
447TZ	NU318	318	NU318	318
447TZ	NU318	NU318	NU220	315
447TS	313C3	313C3	313C3	313C3
449TZ	—	—	NU320	318
449TZ	—	—	NU320	315
449TS	—	—	313C3	313C3
505T	NU320	320	—	—
505TS	313C3	313C3	—	—
5007N	NU320	320	NU320	320
5007NS	313C3	313C3	313C3	313C3
5009N	—	—	NU320	320
5009NS	—	—	313C3	313C3
5807N	NU320	320	—	—
5808N	—	—	NU320	320
5810N	—	—	NU320	320
5810NS	—	—	314C3	314C3

Frame	A design	F design
182/4-203/4	205*	204
213/5-224/5	306	206
254U/6-254	308	306
284U-284	310	307
324U/6-324/6	311	309
364U/5-364/5	312	310

*Face and flange mounts use 305.

TYPE DESIGNATIONS

Model Number Code

BASIC — SUFFIX

E B 015 4 F F A 07 or 050* S

Series	Type	hp @ max. rpm†	Poles	Enclosure/type	Features	Hz/volts	Special modifications	Brake ft-lbs	Brake vendor
C Fracl. hp 1 phase Frame 56 E E-series G G-series N N-series 3 phase Frame 56 Rolled steel P Fracl. hp 3 phase Frame 56 Q Fracl. hp 3 phase Frame 140T R R-series 3 phase Frame 56 Case Fe Max S S-series Stainless steel 3 phase Frame 56 U U-series W Wafer thin X X-series Stainless steel 3 phase Frame 140T Y Slitter series	A 60 min. C&H duty B NEMA Design B C NEMA Design C D NEMA Design D 5-8% slip E 30 min. C&H duty F 30 Min. C&H duty, 2 sp, 1 wd G 30 min. C&H duty, 2 sp, 2 wd H High efficiency I Inverter duty J Wound rotor, cont. duty K Wound rotor, 30 min. C&H duty L Wound rotor, 60 min. C&H duty M 2 sp, 1 wd, CT N 2 sp, 2 wd, CT P Oil well pump motor Q Vector duty motor w/encoder* R 2 sp, 1 wd, CHP S 2 sp, 2 wd, CHP T Non-standard frame size, inverter duty only U E- or J-Series U-frame W EPACT '92 compliant X 4 sp, 2 wd, CHP or VT§ Y 2 sp, 1 wd, VT Z 2 sp, 2 wd, VT	Y03 = 1/3 Y05 = 1/5 Y07 = 3/4 Y08 = 7/8 Y15 = 1 1/2 Y75 = 7 1/2 001 = 1 010 = 10 100 = 100	2 = 2 4 = 4 6 = 6 8 = 8 E = 10 F = 12 G = 16 J = 2/4 K = 4/6 L = 4/8 M = 4/12 N = 4/16 P = 6/8 R = 6/12 S = 8/16 T = 4/6 8/12	B TEBC blower cooled C TEFC Sterli-Core D Dripproof F TEFC G TEFC farm duty H TEFC threaded shaft, no thermal protection I TEFC threaded shaft, with auto reset J TEFC, auto reset K TEFC, man. reset L TEFC mill & chem duty M TENV Sterli-Seal/Core N TENV P TEFC Sterli-Seal R TEFC BISSC S TEFC Supra-Duty Y Explosion-proof	A C-face footed 2-P long shaft B C-face footed C C-face footless D D-flange footless E D-flange footed F Foot mount G C-face footless w/locked bearing H C-face footed w/locked bearing J C.C. pump (JM) K C.C. pump (JP) L Std. NEMA DE shaft, C-face both ends, footless M Std. NEMA DE shaft, C-face ODE, footless N Std. NEMA DE shaft, footed O Std. NEMA DE shaft, footless P P-base footless Q Std. NEMA DE shaft, tapered ODE, footed R Std. NEMA DE shaft, tapered ODE, footless S Brake motor footed T Brake motor footless/C-face V C-face footed NEMA TS, short shaft, 1800 rpm & slower W Oil well pump motor, footed X Special features not covered elsewhere Y Brake motor footed/ C-face Z Same as V, w/o C-face	A 60/208-230/460 B 60/460 C 60/230 D 60/240/480 E 60/220/440 F 60/200 G 60/208 H 60/575 I 60/230/460 J 60/Other K 50/190/380 L 50/190 M 50/208/416 N 50/220 O 50/380 P 50/400 R 50/200/400 S 50/220/440 T 50/Other U 50/60 190/380 230/460 V 60/230/460/796 W 60/115/208-230 X 60/208-230 Z Special	01 NEMA Design D, 8-13% slip per CD-10063 230V 02 NEMA Design D, 8-13% slip per CD-10073 230V 03 NEMA Design D, 5-8% slip, 5 min. duty per CD-10047 04 Partial motor kit, NEMA Design D, 5-8% slip 05 Assembly position F-2 06 C-face footed with NEMA BA dimension P Slitter motor OD reference code. See slitter model code sheet or consult factory.	Y15 = 1.5 001 = 1 010 = 10 100 = 100	Stearns Dings Lenze Reuland Warner

* In case of vector motors, the PPR rating of the encoder follows the model number instead of the foot-pound rating of the brake.
§ Check number of poles and horsepower rating to determine whether unit is constant horsepower or variable torque.
† Horsepower at nominal 60 Hz for variable frequency inverter/vector duty motors.

EASA Technical Manual © 1996-2012, Electrical Apparatus Service Association, Inc.

STROMBERG

(U.S. Agent: ABB Industrial Systems)

BEARING INFORMATION

Frame	Poles	Drive bearing	Non-drive bearing
71	All	6203Z	6202Z
80	All	6204Z	6203Z
90	All	6205Z	6205Z
100	All	6306Z	6206Z
112	All	6307Z	6206Z
132	All	6308Z	6307Z
160	All	6309	6308
180	All	6310*	6309
200	All	6312*	6311
225	All	6313*	6312
250	All	6315*	6313
280	All	6316*	6315
315	2	6316*	6316
315	4 & UP	6319*	6316
355	2	6319	6319
355	4 & UP	6322	6319
400	2	6319	6319
400	4 & UP	6324	6322
500	2	6319	6319
500	4 & UP	6324	6324

* Corresponding NU bearing if roller bearing is required.

SUMITOMO MACHINERY CORP. OF AMERICA

DATE CODES

AC motors for Cyclo and Beier reducers: Serial number starts with last digit of year.

DC motors: Serial number starts with last two digits of year.

TYPE DESIGNATIONS

SUMITOMO MOTOR TYPE SYMBOLS VS. JP/JC SYMBOLS CORRELATION TABLE

Types symbol of Sumitomo motor			Protection type			Cooling method
			Name of protection			
Classification by structure	Symbol	Representative symbol	1st type name	2nd type name	Symbol	Symbol
Totally-enclosed, non-ventilated type	E	TC-E	Totally-enclosed	Splash-proof	JP44	JCN4
Totally-enclosed, fan-cooled type	F	TC-F	Totally-enclosed	Splash-proof	JP 44	JC4
Outdoor type	X	TC-FX	Totally-enclosed	Splash-proof	JPW44	JCN4 or JC4
Increased safety type	A	TC-FA	Totally-enclosed	Splash-proof	JPE 44	JCN4 or JC4
Outdoor increased safety type	B	TC-FB	Totally-enclosed	Splash-proof	JPWE44	JCN4 or JC4
Explosion-proof type	C	TK-FC	Totally-enclosed	Splash-proof	JPE44	JCN4 or JC4
Outdoor explosion-proof	CX	TK-FCX	Totally-enclosed	Splash-proof	JPWE44	JCN4 or JC4
Corrosion protection	-	TC-F	Totally-enclosed	Splash-proof	JPC44	JCN4 or JC4
Dustproof type	-	TC-F	Dustproof	Splash-proof	JP54	JCN4 or JC4

EASA Technical Manual © 1996-2012, Electrical Apparatus Service Association, Inc.

TYPE DESIGNATIONS—CONTINUED

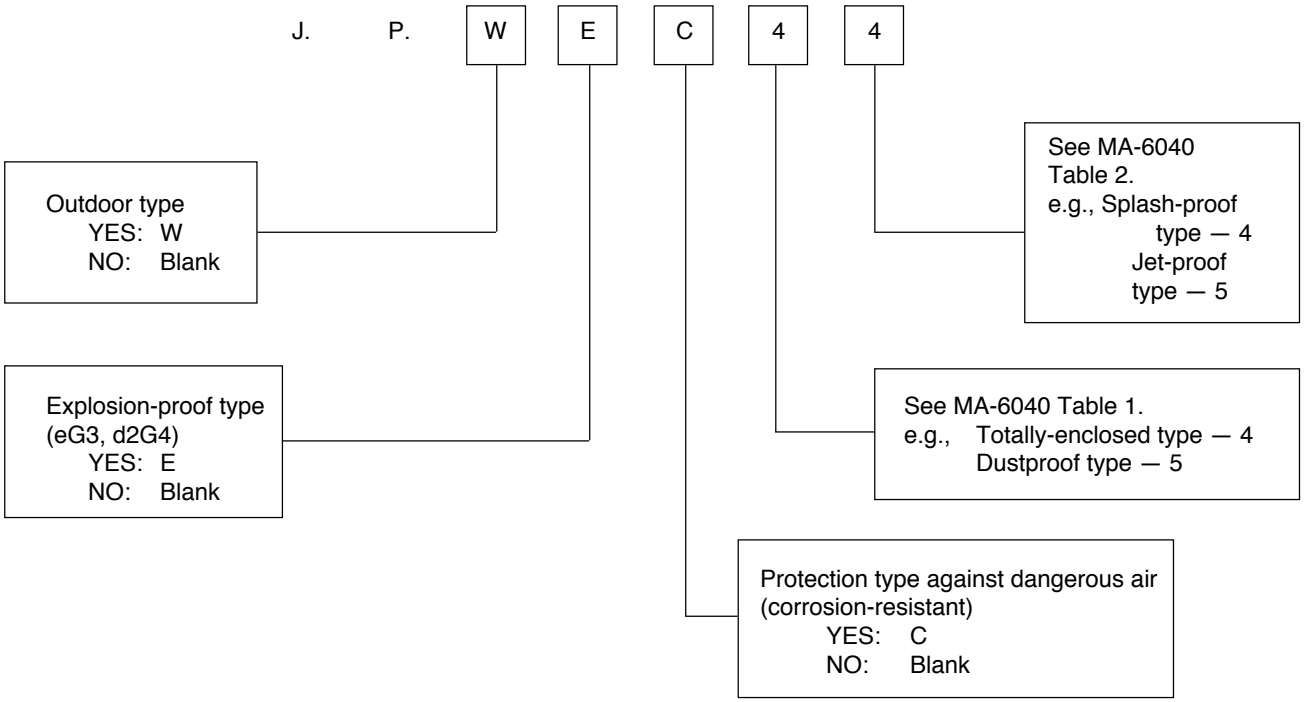

BEARING INFORMATION

F-FRAME BEARINGS

F-63S~100L, 3000 SERIES CYCLO GEARMOTOR

Motor frame	HPXP	Cyclo model	Bearing size	
			Drive end	Non-drive end
F-63S	1/8x4	3075	6302ZZ-CM	6202ZZ-CM
		3085	6302ZZ-CM	6202ZZ-CM
		3090-97	6303ZZ-CM	6202ZZ-CM
F-63	1/4x4 1/3x4	3075	6302ZZ-CM	6202ZZ-CM
		3085	6302ZZ-CM	6202ZZ-CM
		3090-97	6303ZZ-CM	6202ZZ-CM
		3100,05	6303ZZ-CM	6202ZZ-CM
F-71	1/2x4	3085	6302ZZ-CM	6202ZZ-CM
		3090-97	6303ZZ-CM	6202ZZ-CM
		3100,5	6303ZZ-CM	6202ZZ-CM
		3110-1H	6305ZZ-CM	6202ZZ-CM
F-80S F-80	3/4x4 1x4	3090-97	6303ZZ-CM	6203ZZ-CM
		3100-OH	6303ZZ-CM	6203ZZ-CM
		3110-1H	6205ZZ-CM	6203ZZ-CM
		3140-5H	6206ZZ-CM	6203ZZ-CM
F-90S F-90L	1.5x4 2x4	3090-97	6303ZZ-CM	6204ZZ-CM
		3100,05	6204ZZ-CM	6204ZZ-CM
		3110-1H	6205ZZ-CM	6204ZZ-CM
		3140-5H	6206ZZ-CM	6204ZZ-CM
		3160-6H	6307ZZ-CM	6204ZZ-CM
F-100L	3x4	3100,5	6204ZZ-CM	6205ZZ-CM
		3110-1H	6205ZZ-CM	6205ZZ-CM
		3140-5H	6206ZZ-CM	6205ZZ-CM
		3160-6H	6307ZZ-CM	6205ZZ-CM

BEARING INFORMATION—CONTINUED

F-FRAME BEARINGS

F-112M~250S, 3000 SERIES CYCLO GEARMOTOR

Motor frame	HPXP	Cyclo model	Bearing size	
			Drive end	Non-drive end
F-112M	5x4	3110-1H	6305ZZ-CM	6206ZZ-CM
		3140-5H	6206ZZ-CM	6206ZZ-CM
		3160-6H	6307ZZ-CM	6206ZZ-CM
		3170,75	6308ZZ-CM	6206ZZ-CM
		3180,85	6309ZZ-CM	6206ZZ-CM
F-132S	7.5x4	3110-1H	6305ZZ-CM	6206ZZ-CM
		3140-5H	6206ZZ-CM	6206ZZ-CM
		3160-6H	6307ZZ-CM	6206ZZ-CM
		3170,75	6308ZZ-CM	6206ZZ-CM
		3180,85	6309ZZ-CM	6206ZZ-CM
		3190,95	6311ZZ-CM	6206ZZ-CM
F-132M	10x4	3140-5H	6306ZZ-CM	6307ZZ-CM
		3160-6H	6307ZZ-CM	6307ZZ-CM
		3170,75	6309ZZ-CM	6307ZZ-CM
		3180,85	6310ZZ-CM	6307ZZ-CM
		3190,95	6311ZZ-CM	6307ZZ-CM
F-160M	15x4	3140-5H	6306ZZ-CM	6307ZZ-CM
		3160-6H	6307ZZ-CM	6307ZZ-CM
		3170,75	6309ZZ-CM	6307ZZ-CM
		3180,85	6310ZZ-CM	6307ZZ-CM
		3190,95	6311ZZ-CM	6307ZZ-CM
		3205	6311ZZ-CM	6307ZZ-CM
		3215	6312ZZ-CM	6307ZZ-CM
F-180L	40x4	3190,95	6313ZZ-CM	6312ZZ-CM
		3205	6312ZZ-CM	6312ZZ-CM
		3215	6313ZZ-CM	6312ZZ-CM
		3225	6314ZZ-CM	6312ZZ-CM
	25x6	3180,85	6311ZZ-CM	6312ZZ-CM
		3190,95	6313ZZ-CM	6312ZZ-CM
		3205	6312ZZ-CM	6312ZZ-CM
		3215	6313ZZ-CM	6312ZZ-CM
		3225	6314ZZ-CM	6312ZZ-CM
	30x6	3235	NU314G1	6312ZZ-CM
		3245	NU315G1	6312ZZ-CM
		3255	NU317G1	6312ZZ-CM
F-200L	50x4 60x4	3190,95	6313ZZ-CM	6312ZZ-CM
		3205	6312ZZ-CM	6312ZZ-CM
		3215	6313ZZ-CM	6312ZZ-CM
		3225	6314ZZ-CM	6312ZZ-CM
	40x6 50x6	3235	NU314G1	6312ZZ-CM
		3245	NU315G1	6312ZZ-CM
		3255	NU317G1	21312
		3265	NU318G1	21312
F-225S	75x4	3205	6312ZZ-CM	6314ZZ-CM
		3215	6313ZZ-CM	6314ZZ-CM
		3225	6314ZZ-CM	6314ZZ-CM
	60x4	3235	NU314G1	6314ZZ-CM
		3245	NU315G1	6314ZZ-CM
		3255	NU317G1	6314ZZ-CM
		3265	MU318G1	6314ZZ-CM
F-250S	75x6	3235	NU314G1	6314ZZ-CM
		3245	NU315G1	6314ZZ-CM
		3255	NU317G1	6314ZZ-CM
		3265	NU318G1	6314ZZ-CM

EASA Technical Manual © 1996-2012, Electrical Apparatus Service Association, Inc.

BEARING INFORMATION—CONTINUED

G-FRAME BEARINGS

G-160L~180M, 3000 SERIES CYCLO GEARMOTOR

Motor frame	HPXP	Cyclo model	Bearing size	
			Drive end	Non-drive end
G-160L	20x4	315H	6306ZZ-CM	6309ZZ-CM
		3160-6H	6308ZZ-CM	6309ZZ-CM
		3170,75	6309ZZ-CM	6309ZZ-CM
		3180,85	6311ZZ-CM	6309ZZ-CM
	15x6	3190,95	6311ZZ-CM	6309ZZ-CM
		3205	6312ZZ-CM	6309ZZ-CM
		3215	6313ZZ-CM	6309ZZ-CM
G-180M	25x4	3160-6H	6308ZZ-CM	6312ZZ-CM
		3170,75	6309ZZ-CM	6312ZZ-CM
		3180,85	6311ZZ-CM	6312ZZ-CM
		3190,95	6313ZZ-CM	6312ZZ-CM
	30x4	3205	6312ZZ-CM	6312ZZ-CM
		3215	6313ZZ-CM	6312ZZ-CM
	20x6	3225	6314ZZ-CM	6312ZZ-CM
		3235	NU314-G1	6312ZZ-CM
		3245	NU315-G1	6312ZZ-CM

M-FRAME BEARINGS

F-63S~71, 3000 SERIES CYCLO GEARMOTOR

Motor frame	HPXP	Cyclo model	Bearing size	
			Drive end	Non-drive end
M-63S	1/8x4	3075	6203ZZ-CM	6202ZZ-CM
		3085	6203ZZ-CM	6202ZZ-CM
		3090-97	6204ZZ-CM	6202ZZ-CM
M-63	1/4x4	3075	6203ZZ-CM	6202ZZ-CM
		3085	6203ZZ-CM	6202ZZ-CM
		3090-97	6203ZZ-CM	6202ZZ-CM
	1/3x4	3100,05	6203ZZ-CM	6202ZZ-CM
		3110-1H	6205ZZ-CM	6202ZZ-CM
M-71	1/2x4	3085	6203ZZ-CM	6202ZZ-CM
		3090-97	6204ZZ-CM	6202ZZ-CM
		3100,05	6204ZZ-CM	6202ZZ-CM
		3110-1H	6205ZZ-CM	6202ZZ-CM

EASA Technical Manual © 1996-2012, Electrical Apparatus Service Association, Inc.

TECO AMERICAN, INC.

(Now TECO-Westinghouse Motor Co.)

DATE CODES

Date codes are two letters with the month code preceding the year code.

January - A	July - G	1975 - L	1980 - Q	1985 - V
February - B	August - H	1976 - M	1981 - R	1986 - W
March - C	September - J	1977 - N	1982 - S	1987 - X
April - D	October - K	1978 - O	1983 - T	1988 - Y
May - E	November - L	1979 - P	1984 - U	1989 - Z
June - F	December - M			1990 - A

TYPE DESIGNATIONS

Model number nomenclature of TECO motors:

1 2 3 4 5 6
X X X X X X

Modification Classification

—: Standard type
CF: With C-face flange
DF: With D-face flange
XU: Explosion-proof
JP: NEMA JP type
JM: NEMA JM type
FP: Oil field pumping service motor

Construction and Series Classification

EA: Fan-cooled 600V and less squirrel-cage NEMA dimensions with foot
FA: Protected dripproof 600V and less squirrel-cage NEMA dimensions with foot
VA: Vertical mounted 600V and less squirrel-cage NEMA dimensions without foot
HE: Fan-cooled 600V and less squirrel-cage NEMA dimensions with foot (high-efficiency motor)
HA: Medium voltage 2300-4160V squirrel cage NEMA dimensions with foot

Main Classification

E: Totally-enclosed
S: Dripproof (guarded and dripproof per NEMA standard)

Product Classification

A: 3-phase AC induction machine

EASA Technical Manual © 1996-2012, Electrical Apparatus Service Association, Inc.

TYPE DESIGNATIONS—CONTINUED

Type	Descriptions
AEEA*	TEFC Class B insulation, 140T-365T Class F insulation, 400T-445T
ASFA*	ODP Class B insulation, 140T-365T Class F insulation, 400T-445T
AEEAAR*	TEFC Class F insulation, long shaft, 447TZ and 449TZ; or w/ non-standard shaft.
ASFAAR*	ODP - same as above
AEEAHD	TEFC Class F insulation, frame 5000-6800 Min. LRT 200%, Min BDT 250%
ASFAHD	ODP - same as above
*For 400T and above, 4P & 6P are Design C with Min, BDT 250%.	
AEEABB*	TEFC Class F insulation, 140T-365T
ASFABB*	ODP - same as above
*All motors made in June/86 and after.	
AEVACF	TEFC, C-face without feet
AEEACF	TEFC, C-Face with Feet
AEHA	Medium voltage TEFC
ASHA	Medium voltage ODP
AEHE	Hi-eff-severe duty (MAX-E1)
AEEAXU	Explosion-proof
ASFAFP	Oil well pump design
AEEAXX	TEFC, with specials (voltage, Hz, etc)
ASFAXX	ODP, with specials (voltage, Hz, etc)

BEARING INFORMATION

BEARINGS FOR ODP MOTORS

hp	rpm	Frame	Drive end bearing	Opposite drive end bearing
1.00	1800	143T	6205ZZ	6205ZZ
1.00	1200	145T	6205ZZ	6205ZZ
1.50	3600	143T	6205ZZ	6205ZZ
1.50	1800	145T	6205ZZ	6205ZZ
1.50	1200	182T	6306ZZ	6306ZZ
2.00	3600	145T	6205ZZ	6205ZZ
2.00	1800	145T	6205ZZ	6205ZZ
2.00	1200	184T	6306ZZ	6306ZZ
3.00	3600	145T	6205ZZ	6205ZZ
3.00	1800	182T	6306ZZ	6306ZZ
3.00	1200	213T	6308ZZ	6306ZZ
5.00	3600	182T	6306ZZ	6306ZZ
5.00	1800	184T	6306ZZ	6306ZZ
5.00	1200	215T	6308ZZ	6306ZZ
7.50	3600	184T	6306ZZ	6306ZZ
7.50	1800	213T	6308ZZ	6306ZZ
7.50	1200	254T	6310ZZ	6309ZZ
10.00	3600	213T	6308ZZ	6306ZZ
10.00	1800	215T	6308ZZ	6306ZZ
10.00	1200	256T	6310ZZ	6309ZZ
15.00	3600	215T	6308ZZ	6306ZZ
15.00	1800	254T	6310ZZ	6309ZZ
15.00	1200	284T	NU213	6211
20.00	3600	254T	6310	6309
20.00	1800	256T	6310	6309
20.00	1200	286T	NU213	6211
25.00	3600	256T	6310	6309
25.00	1800	284T	NU213	6211
25.00	1200	324T	NU213	6213
30.00	3600	284TS	6212C3	6212C3
30.00	1800	286T	NU213	6211
30.00	1200	326T	NU213	6213
40.00	3600	286TS	6212C3	6212C3
40.00	1800	324T	NU213	6213
40.00	1200	364T	6314	6213
50.00	3600	324TS	6213C3	6213C3
50.00	1800	326T	NU213	6213
50.00	1200	365T	6314	6213
60.00	3600	326TS	6213C3	6213C3
60.00	1800	364T	6314	6213
60.00	1200	404T	NU317	6317
75.00	3600	364TS	6313C3	6213C3
75.00	1800	365T	6314	6213
75.00	1200	405T	NU317	6317
100.00	3600	365TS	6313C3	6213C3
100.00	1800	404T	NU317	6317
100.00	1200	444T	NU318	6318

EASA Technical Manual © 1996-2012, Electrical Apparatus Service Association, Inc.

BEARING INFORMATION—CONTINUED

BEARINGS FOR ODP MOTORS—CONTINUED

hp	rpm	Frame	Drive end bearing	Opposite drive end bearing
125.00	3600	404TS	6313C3	6313C3
125.00	1800	405T	NU317	6317
125.00	1200	445T	NU318	6318
150.00	3600	405TS	6313C3	6313C3
150.00	1800	444T	NU318	6318
150.00	1200	445T	NU318	6318
200.00	3600	444TS	6314C3	6314C3
200.00	1800	445T	NU318	6318
200.00	1200	447TZ	NU320	6318
250.00	3600	445TS	6314C3	6314C3
250.00	1800	447TZ	NU320	6318
250.00	1200	449TZ	NU320	6318
300.00	3600	445TS	6314C3	6314C3
300.00	1800	449TZ	NU320	6318
300.00	1200	5007C	NU324	6320
350.00	3600	447TS	6315C3	6315C3
350.00	1800	5007C	NU324	6320
350.00	1200	5009B	NU324	6320
400.00	3600	449TS	6315C3	6315C3
400.00	1800	5009B	NU324	6320
400.00	1200	5806B	NU326	6322
450.00	3600	5009A	6314C3	6314C3
450.00	1800	5806B	NU326	6322
450.00	1200	5808B	NU326	6322
500.00	3600	5808A	6314C3	6314C3
500.00	1800	5806B	NU326	6322
500.00	1200	5808B	NU326	6322

BEARINGS FOR TEFC MOTORS

hp	rpm	Frame	Drive end bearing	Opposite drive end bearing
.75	1200	143T	6205ZZ	6205ZZ
.75	900	145T	6205ZZ	6205ZZ
1.00	1800	143T	6205ZZ	6205ZZ
1.00	1200	145T	6205ZZ	6205ZZ
1.00	900	182T	6306ZZ	6306ZZ
1.50	3600	143T	6205ZZ	6205ZZ
1.50	1800	145T	6205ZZ	6205ZZ
1.50	1200	182T	6306ZZ	6306ZZ
1.50	900	184T	6306ZZ	6306ZZ
2.00	3600	145T	6205ZZ	6205ZZ
2.00	1800	145T	6205ZZ	6205ZZ
2.00	1200	184T	6306ZZ	6306ZZ
2.00	900	213T	6308ZZ	6306ZZ

BEARING INFORMATION—CONTINUED

BEARINGS FOR TEFC MOTORS—CONTINUED

hp	rpm	Frame	Drive end bearing	Opposite drive end bearing
3.00	3600	182T	6306ZZ	6306ZZ
3.00	1800	182T	6306ZZ	6306ZZ
3.00	1200	213T	6308ZZ	6306ZZ
3.00	900	215T	6308ZZ	6306ZZ
5.00	3600	184T	6306ZZ	6306ZZ
5.00	1800	184T	6306ZZ	6306ZZ
5.00	1200	215T	6308ZZ	6306ZZ
5.00	900	254T	6309ZZ	6307ZZ
7.50	3600	213T	6308ZZ	6306ZZ
7.50	1800	213T	6308ZZ	6306ZZ
7.50	1200	254T	6309ZZ	6307ZZ
7.50	900	256T	6309ZZ	6307ZZ
10.00	3600	215T	6308ZZ	6306ZZ
10.00	1800	215T	6308ZZ	6306ZZ
10.00	1200	256T	6309ZZ	6307ZZ
10.00	900	284T	6311ZZ	6310ZZ
15.00	3600	254T	6309ZZ	6307ZZ
15.00	1800	254T	6309ZZ	6307ZZ
15.00	1200	284T	6311ZZ	6310ZZ
15.00	900	286T	6311ZZ	6310ZZ
20.00	3600	256T	6309ZZ	6307ZZ
20.00	1800	256T	6309ZZ	6307ZZ
20.00	1200	286T	6311ZZ	6310ZZ
20.00	900	324T	6312	6212
25.00	3600	284TS	6211C3	6211C3
25.00	1800	284T	6311ZZ	6310ZZ
25.00	1200	324T	6312	6212
25.00	900	326T	6312	6212
30.00	3600	286TS	6211C3	6211C3
30.00	1800	286T	6311ZZ	6310ZZ
30.00	1200	326T	6312ZZ	6212ZZ
30.00	900	364T	6313	6213
40.00	3600	324TS	6312C3	6212C3
40.00	1800	324T	6312ZZ	6212ZZ
40.00	1200	364T	6313ZZ	6213ZZ
40.00	900	365T	6313ZZ	6213ZZ
50.00	3600	326TS	6312C3	6212C3
50.00	1800	326T	6312ZZ	6212ZZ
50.00	1200	365T	6313	6213
50.00	900	404T	6317	6313
60.00	3600	364TS	6312C3	6212C3
60.00	1800	364T	6313	6213
60.00	1200	404T	6317	6313
60.00	900	405T	6317	6313
75.00	3600	365TS	6312C3	6212C3
75.00	1800	365T	6313	6213
75.00	1200	405T	6317	6313
75.00	900	444T	NU318	6318

EASA Technical Manual © 1996-2012, Electrical Apparatus Service Association, Inc.

BEARING INFORMATION—CONTINUED

BEARINGS FOR TEFC MOTORS—CONTINUED

hp	rpm	Frame	Drive end bearing	Opposite drive end bearing
100.00	3600	405TS	6313C3	6313C3
100.00	1800	405T	6317	6313
100.00	1200	444T	NU318	6318
100.00	900	445T	NU318	6318
125.00	3600	444TS	6313C3	6313C3
125.00	1800	444T	NU318	6318
125.00	1200	445T	NU318	6318
125.00	900	447TZ	NU320	6318
150.00	3600	445TS	6313C3	6313C3
150.00	1800	445T	NU318	6318
150.00	1200	447TZ	NU320	6318
150.00	900	449TZ	NU320	6318
200.00	3600	447TS	6314C3	6314C3
200.00	1800	447TZ	NU320	6318
200.00	1200	449TZ	NU320	6318
200.00	900	5007C	NU324	6280
250.00	3600	449TS	6314C3	6314C3
250.00	1800	449TZ	NU320	6318
250.00	1200	5007C	NU324	6320
250.00	900	5009C	NU324	6320
300.00	3600	5007A	6314C3	6314C3
300.00	1800	5007C	NU324	6320
300.00	1200	5009C	NU324	6320
300.00	900	5806B	NU326	6322
350.00	3600	5009A	6314C3	6314C3
350.00	1800	5009C	NU324	6320
350.00	1200	5806B	NU326	6322
350.00	900	5808B	NU326	6322
400.00	3600	5808A	6314C3	6314C3
400.00	1800	5806B	NU326	6322
400.00	1200	5808B	NU326	6322
450.00	3600	5810A	6314C3	6314C3
450.00	1800	5808B	NU326	6322
450.00	1200	5808B	NU326	6322
500.00	3600	6806A	6314C3	6314C3
500.00	1800	5808B	NU326	6322
500.00	1200	5808B	NU326	6322

BEARING INFORMATION—CONTINUED

HORIZONTAL

Frame	Poles	Drive bearing	Non-drive bearing
63	2 & 4	6201ZZ	6201ZZ
71	2 - 6	6202ZZ	6202ZZ
80	2 - 8	6204ZZ	6204ZZ
90	2 - 8	6205ZZ	6205ZZ
100	2 - 8	6206ZZ	6305ZZ
112	2 - 8	6306ZZ	6306ZZ
132	2 - 8	6308ZZ	6306ZZ
160	2 - 8	6309ZZ	6307ZZ
180M	2	6211C3	6211C3
180M	4 - 8	6311ZZ	6310ZZ
180L	2	6312C3	6310C3
180L	4 - 8	6312	6310
200	2	6312C3	6212C3
200	4 - 8	NU313	6212
225	2	6312C3	6212C3
225	4 - 8	NU314	6213
250	2	6213C3	6213C3
250	4 - 8	NU216	6213
280	2	6214C3	6214C3
280	4 - 8	NU218	6214
315	2	6314C3	6314C3
315	4 - 8	NU220	6218
355	2	6314C3	6314C3
355	4 - 12	NU220	6318
400	2	6314C3	6314C3
400	4 - 12	NU220	6318
450	4 - 12	NU224	6320

SLIP RING MOTORS

Frame	Drive bearing	Non-drive bearing
160	6309*	6309*
180	6311*	6310*
200	6312	6310
225	6313	6310
250	NU216	6312
280	NU218	6314
315 SC, MC	NU220	6316
315 AB, CB	NU220	6220
355	NU220	6320

* Grease pre-packed shielded rolling bearings.

EASA Technical Manual © 1996-2012, Electrical Apparatus Service Association, Inc.

BEARING INFORMATION—CONTINUED

FLANGE- AND FOOT-MOUNTED ENCLOSED

Frame	Poles	Drive bearing	Non-drive bearing
63	2 & 4	6201	6201
71	2 - 6	6202	6202
80	2 - 8	6204	6204
90	2 - 8	6205	6205
100	2 - 8	6206	6305
112	2 - 8	6306	6306
132	2 - 8	6308	6306
160	2 - 8	6309	6307
180	2	6211C3	6211C3
180	4 - 8	6311	6310
200	2	6312C3	6212C3
200	4 - 8	6312	6212
225	2	6312C3	6212C3
225	4 - 8	6313	6213
250	2	6213C3	6213C3
250	4 - 8	NU216	6213
280	2	6214C3	6214C3
280	4 - 8	NU218	6214
315	2	6314C3	6314C3
315	4 - 8	NU220	6217

FLANGE-MOUNTED ENCLOSED

Frame	Poles	Drive bearing	Non-drive bearing
63	2 & 4	6201	6201
71	2 - 6	6202	6202
80	2 - 8	6204	6204
90	2 - 8	6205	6205
100	2 - 8	6206	6305
112	2 - 8	6306	6306
132	2 - 8	6308	6306
160	2 - 8	6309	6307
180	2	6211C3	6211C3
180	4 - 8	6311	6310
200	2	6312C3	6212C3
200	4 - 8	6312	6212
225	2	6312C3	6212C3
225	4 - 8	6313	6213
250	2	6213C3	6213C3
250	4 - 8	NU216	6216
280	2	6214C3	6214C3
280S	4 - 8	NU218	6218
280M	4-8	NU218	6213
315	2	6314C3	6314C3
315	4 - 8	NU220	6220

TOSHIBA/HOUSTON INT'L CORP., INDUSTRIAL DIV.

DATE CODES

In serial number the first and second digits represent the last two digits of the year of manufacture (e.g., "93" stands for "1993"). The third digit designates the month.

1 - January	5 - May	9 - September
2 - February	6 - June	X - October
3 - March	7 - July	Y - November
4 - April	8 - August	Z - December

TYPE DESIGNATIONS

Example: B0014DBF2AOHP -	B	001	4	D	B	F	2	A	0	hp
Part -	1	2	3	4	5	6	7	8	9	10

First Part	For 3 phase	NEMA Design Letter A, B, C, D or E for wound rotor, F for other, I for explosion-proof, Z for IEC metric
	For 1 phase	L, M, N, O - Capacitor start P, Q, R, S - Split-phase T, U, V, W - Capacitor start - capacitor run G - Permanent split capacitor
Second Part	Horsepower	001 = 1 hp, 050 = 50 hp, 100 = 100 hp Y75 = 7.5 hp, Y15 = 1.5 hp, 1/2 = 1/2 hp
Third Part	Poles and fan	2 - 2 pole bi-directional fan 3 - 2 pole uni-directional fan 4 - 4 pole bi-directional fan 5 - 4 pole uni-directional fan 6 - 6 pole bi-directional fan 8 - 8 pole bi-directional fan E - 8 pole uni-directional fan 9 - 10 pole bi-directional fan F - 10 pole uni-directional fan A - 12 pole bi-directional fan G - 12 pole uni-directional fan W - Multi-speed, 1 winding X - Multi-speed, 2 winding Y - Multi-speed, 3 winding Z - Other

EASA Technical Manual © 1996-2012, Electrical Apparatus Service Association, Inc.

TYPE DESIGNATIONS—CONTINUED

Fourth Part Enclosure

A - Open
B - Totally-enclosed air over
D - Dripproof, guarded
E - Totally-enclosed
F - Totally-enclosed, fan-cooled
G - Weather protected - Type I
M - Splash-proof
N - Weather protected - Type II
V - Dripproof
W - TEFC, outdoor use
Y - Explosion-proof

Fifth Part Insulation class and service factor

	Insulation class	Service factor
A	A	1.0
B	A	1.15
C	A	1.25
D	A	1.35
E	A	1.4
F	B	1.0
G	B	1.15
H	B	1.25
I	B	1.35
J	B	1.4
V	B	Special

	Insulation class	Service factor
K	F	1.0
L	F	1.15
M	F	1.25
N	F	1.35
O	F	1.4
W	F	Special
P	H	1.0
Q	H	1.15
R	H	1.25
S	H	1.35
T	H	1.4
X	H	Special

Sixth Part Mounting and shaft

F, G, A Floor mtd rigid base - belt, short, special (respectively)
R, Q, I Resilient base - standard, short, special (respectively)
S, T, U Solid base - standard, short, special (respectively)
B, H C-face with feet - standard, special (respectively)
C, J C-face without feet - standard, special (respectively)
E, K D-flange with feet - standard, Special (respectively)
D, L D-flange without feet - standard, special (respectively)
P, M Vertical P base - standard, special (respectively)
S SKF gearmotor - special shaft/flange

TYPE DESIGNATIONS—CONTINUED

Seventh Part Type of bearing

1 - Shielded with plugs
2 - Shielded without plugs
3 - Open ball bearing
4 - Roller bearing (drive end only)
5 - Roller bearing with grease fitting (both ends)
6,7 - Sleeve bearing
F,G,H - Angular contact
J,K - Spherical roller thrust

Eighth Part Volts - Hertz

A 230/460 - 60
B 460 - 60
C 230 - 60
D 115/230 - 60
E 115 - 60
F 240/480 - 60
G 2300 or 2400 - 60
H 220/380 - 50
I 4000 or 4160 - 60
J 2300/4160 or 2300/4000 or 2400/4160 - 60
K 6000 or 6600 - 60
L 208/416 - 60
M 13200 - 60
N 220/440 - 60
O 575 - 60
P Other - 60
Q 2300 - 50
R 4000 or 4160 - 50
S 4600 - 50
T 6000 or 6600 - 50
U 230/460 - 60*
V 190/380 - 50
W 200/400 - 50
X 220/440 - 50
Y Other - 50
Z Other

Ninth Part Internal use

Tenth Part

C Cast iron parts on standard efficiency only
D Severe duty motor
P Protective devices: Klixons, Thermistors, etc.
R Renameplate of standard motor
U Inverter-duty (constant torque)
V Inverter-duty (variable torque)
W EPACT motor design
X PTKK IEC motors

EASA Technical Manual © 1996-2012, Electrical Apparatus Service Association, Inc.

BEARING INFORMATION

NEMA frame	Dripproof		TEFC		Explosion-proof	
	DE	ODE	DE	ODE	DE	ODE
143/5T	6205	6205	6205	6205	6306	6205
182/4T	6306	6206	6306	6206	6307	6206
213/5T	6308	6208	6308	6208	6309	6208
213/5T(2 pole)	6309	6208	6308	6208	6309	6208
254/6T(2 pole)	6309	6208	6309	6208	6309	6309
254/6T	6309	6208	6309	6208	6310	6309
284/6T	6312	6211	6310	6310	6310	6310
284/6TS	6211C3	6211C3	6310C3	6310C3	6310	6310
324/6T	6313	6312	6312	6312	6312	6312
324/6TS	6312C3	6312C3	6312C3	6312C3	6312	6310
364/5T	6314	6313	6314	8312	6314	6312
364/5TS	63t3C3	6313C3	6312C3	6312C3	6312	6312
404/5T	6317	6313	6317	6313	6317	6317
404/5TS	6313C3	6313C3	6313C3	6313C3	6313	6313
444/5T	NU318	6318	NU318	6318	NU318	6313
444/5TS	6313C3	6313C3	6313C3	6313C3	6313	6313
445/7TZ	NU318	6318	NU318	6318	NU318	6313
447/TSS	6313C3	6313C3	6313C3	6313C3	6313	6313
447TS	6318	6318	6318	6318	—	—
505UZ	NU322	6320	NU322	6318	—	—
505US	6320	6320	6318	6318	—	—
505USS	6313C3	6313C3	6313C3	6313C3	—	—
507UZ	NU322	6320	—	—	—	—
507US	6320	6320	—	—	—	—
507USS	6313C3	6313C3	—	—	—	—
(N)587UZ	—	—	NU324	6320	—	—
(N)587US	—	—	6320	6320	—	—
(N)587USS	—	—	6313C3	6313C3	—	—

BEARING INFORMATION—CONTINUED

DRIPPROOF MOTORS

Frame	Poles	Drive bearing	Non-drive bearing
80	2 & 4	6204	6204
90	2 - 8	6205	6205
100	2 - 8	6305	6205
112	2 - 8	6306	6206
132	2 - 8	6308	6208
160M	2 - 8	6309	6208
160L	2 - 8	6310	6208
180	2	6312C3	6211C3
180	4 - 8	6312	6211
200	2	6312C3	6312C3
200M	4 - 8	6313	6312
200L	4	NU2215	6312
200L (Cl. E Insul.)	6 - 8	6313	6312
200L (Cl. F Insul.)	6 - 8	6314	6312
225	2	6313C3	6313C3
225	4 - 8	NU2217	6313
250	2	6313C3	6313C3
250	4 - 8	NU2218	6313
280S	2	6313C3	6313C3
280S	4	6318	6317
280S	6 - 8	NU2220	6317
280M	6	6318	6317
280M	8	NU2220	6317

EASA Technical Manual © 1996-2012, Electrical Apparatus Service Association, Inc.

BEARING INFORMATION—CONTINUED

TOTALLY-ENCLOSED, FAN-COOLED MOTORS

Frame	Poles	Drive bearing	Non-drive bearing
63	2 - 6	6202	6202
71	2 - 8	6203	6203
80	2 - 8	6204	6204
90	2 - 8	6205	6205
100	2 - 8	6305	6205
112	2 - 8	6306	6206
132	2 - 8	6308	6208
160	2 - 8	6309	6208
180	2	6310C3	6310C3
180	4 - 8	6310	6310
200	2	6312C3	6312C3
200L (Cl. E Insul.)	4 - 8	6312	6312
200L (Cl. F Insul.)	4	6313	6312
225	2	6312C3	6312C3
225 (Cl. E Insul.)	4 - 8	6313	6312
225 (Cl. F Insul.)	4	NU2215	6312
225 (Cl. F Insul.)	6 - 8	6314	6312
250	2	6313C3	6313C3
250	4 - 8	NU2218	6313
280	2	6313C3	6313C3
280	4 - 8	NU2218	6315
315S	2	6313C3	6313C3
315	4 - 6	6318	6318
315	8	NU2220	6318

FLAME-PROOF MOTORS

Frame	Drive bearing	Non-drive bearing
E80	6204UU	6204UU
E90	6305UU	6205UU
E100	6206UU	6205UU
E112	6306UU	6206UU
E132	6308UU	6208UU
E160	6309UU	6308UU
E180	6310C3	6310C3
E200	6312C3	6312C3
E225	6312C3	6312C3
E250	6313C3	6312C3

EASA Technical Manual © 1996-2012, Electrical Apparatus Service Association, Inc.

U.S. ELECTRICAL MOTORS

(Now U.S. Motors, A Brand of Nidec Motor Corp.)

AC MACHINE IDENIFICATION/DATE CODES

Sample unit ID number: G12345/Z06Y124R532F

G12345	Z06	Y124R32	F
Model number	Date code	Order number	Plant code

Month code*	
A or 01	January
B or 02	February
C or 03	March
D or 04	April
E or 05	May
F or 06	June
G or 07	July
H or 08	August
J or 09	September
K or 10	October
L or 11	November
M or 12	December

* Numerals are currently used to represent months. For older machines, a letter may have been used.

Year code			
N	1986	Y	1995
P	1987	Z	1996
R	1988	A	1997
S	1989	B	1998
T	1990	C	1999
U	1991	D	2000
V	1992	E	2001
W	1993	F	2002
X	1994		

DC MACHINE IDENIFICATION/DATE CODES

Sample unit ID number: 123456-DX

123456	BBA
Serial number (5 or 6 characters)	Date code (2 or 3 characters)

Month code prior to 1999	
A	January
B	February
C	March
D	April
E	May
F	June
G	July
H	August
J	September
K	October
L	November
M	December

Month code beginning in 1999	
AA	January
BB	February
CC	March
DD	April
EE	May
FF	June
GG	July
HH	August
JJ	September
KK	October
LL	November
MM	December

Year code	
X	1996
Y	1997
Z	1998
A	1999
B	2000
C	2001
D	2002

EASA Technical Manual © 1996-2012, Electrical Apparatus Service Association, Inc.

TYPE DESIGNATIONS

Motor Type Designations

First Letter:

A	Aluminum frame, T frame
C	Cast cron
D	Dripproof, steel, T frame
EA, E	Explosion-proof, U frame
H	Dripproof, cast iron, U frame
JA, J	Totally-enclosed, 56 and U frame
L	Explosion-proof, T frame
M	Single phase
R	Dripproof, cast iron, T frame
T	Totally-enclosed, T frame
U	Unimount, aluminum frame

Second Letter:

A	Super-Life
C	Corro-duty
D	Automotive duty
E	Premium efficiency
F	Footless
G	Synchronous
M	Single phase
N	Non-ventilated
Q	Quiet duty
S	Sleeve bearing
U	Vertical hollow shaft
V	Vertical solid shaft
1 thru 4	Close coupled pump

Third Letter:

C	Corro-duty protection
N	Non-ventilated
4	Hi-thrust pump
9	In-line pump

Varidrive Type Designations (Precedes Motor Type)

VA	Varidrive frame with detachable feet suitable for horizontal or upright mounting
VE	Varidrive frame with feet for horizontal mounting
VAV or VEV	Footless Varidrive frame
VEU	Varidrive frame with feet for upright mounting
VO	Varidrive open type without frame case

Synchrogear Type Designations (Follows Motor Type)

First letter:

G	Geared
PSR	Parallel shaft reducer

Second Letter:

B	Single reduction - footed (V/D Only)
D	Double reduction helical
H	Single reduction helical
L	Double reduction helical duplex gearing
M	Triple reduction helical duplex gearing
P	Right angle pump drive
R, S	Single reduction helical
T	Shaft-mount reducer or triple reduction
W	Right angle worm gear

Third Letter:

B	Double reduction worm/helical combination
F	C face motorless
O	Reducer without motor or shovel
V	Footless, flange-mounted or vertical shaft down
2	Class 2 gears
3	Class 3 gears

BEARING INFORMATION

HORIZONTAL MOTORS

Basic motor frame	Motor type	Bearing number	
		Short end	Pulley end
143-145T B145, 143, 145	D, L, LC T, TC, TF, TN	6203-2Z-J/C3	6205-2Z-J/C3
143-145TC	D, L	6203-2Z-J/C3	6207-2Z-J/C3
143-145JP, JM 143-145TD 143-145TC 143-145JP 143-145JM	T1-4, L1-4 T, TF, TC LF, TC R-1 R-4	6203-2Z-J/C3	6207-2Z-J/C3
143-145T	UT, UTN, UTQ	6203-2Z-J/C3	6205-2Z-J/C3
143-145TD, JM, JP	UT-1, UT-4 UT, UTF	6203-2Z-J/C3	6207-2Z-J/C3
143-145TC	UT-1, UT-4, UT,UTF	6203-2Z-J/C3	6205-2Z-J/C3
182-184T	A, AM, T, TM TN, TC, D	6205-2Z-J/C3	6206-2Z-J/C3
182-184T	L, LC	6205-J/C3	6206-J/C3
182-184TC, TD 182-184TC	L, LC D, D1-4	6205-J/C3 6205-J/C3	6307-J/C3 6207-2Z-J/C3
182-184T, TC, TD, JM	A, T, TF, AF, T-1, T-4	6205-2Z-J/C3	6307-Z-J/C3
182-184JP	LF, L1-4	6205-J/C3	6307-J/C3
182-184JPY, JM	A-1, A-4	6205-2Z-J/C3	6207-J/C3
182-184T, TC, TCH, TD	UT, UTF	6205-2Z-J/C3	6206-2Z-J/C3
182-184TC, TD, JM, JP	TC, TC1-4	6205-2Z-J/C3	6307-J/C3
182-184TD, JP, JPM, JPY	UT-2, UT-4 UTN, UTQ	6205-2Z-J/C3	6307-2Z-J/C3
213-215T	A, AM, T, TC, D, TM, TMQ, TN	6206-2Z-J/C3	6208-2Z-J/C3
213-215T	L, LC	6206-J/C3	6208-J/C3
213-215TC	D	6206-2Z-J/C3	6309-2Z-J/C3
213-215TC, TD, JP, JPZ,JM	A, AF, A-1, A-3, A-4, T, TF, T-1 T-3, T-4	6206-2Z-J/C3	6309-J/C3
213-215JP, JPZ, TC	L, L-1, LF, L-3, L-4	6206-J/C3	6309-J/C3
213-215TC, TD	TC	6206-2Z-J/C3	6309J
213-215T, TC	UT, UTF, UTN, UTQ	6206-2Z-J/C3	6208-2Z-J/C3
213-215TD, JM, JP, JPZ	UT, UTF, UT-1 D1-4, UT-3, UT-4, T1-4	6206-2Z-J/C3	6309-2Z-J/C3
A254T	A	6206-2Z-J/C3	6209-J/C3

EASA Technical Manual © 1996-2012, Electrical Apparatus Service Association, Inc.

BEARING INFORMATION—CONTINUED

HORIZONTAL MOTORS–CONTINUED

Basic motor frame	Motor type	Bearing number	
		Short end	Pulley end
A254T	D	6206-2Z-J/C3	6209-2Z-J/C3
254-256T	A, T, TC, TN, D	6207-2Z-J/C3	6309-2Z-J/C3
A254JP, JM	A-1, A-4	6206-2Z-J/C3	6309-J/C3
A254TC, JP, JM	D, D1-4	6206-2Z-J/C3	6309-2Z-J/C3
254-256TD	A, A-1, A-4, T, TF, T-1	6207-2Z-J/C3	6310-J/C3
256TC, JP, JM	T-4, AF, TC, TC-1-4	6207-2Z-J/C3	6310-J/C3
254-256T	L, LC	6207-J/C3	6309-J/C3
254-256JP, TC, JM	L, L1-4, LF	6207-J/C3	6310-J/C3
254-256T, TC	UT, UTF, UTN, UTQ	6207-2Z-J/C3	6309-2Z-J/C3
254-256TD, JM, JP	UT, UTF UT-1, UT-3 UT-4	6207-2Z-J/C3	6310-2Z-J/C3
256TC, JP, JM	D, D1-4	6207-2Z-J/C3	6310-2Z-J/C3
284-286T, TS	R	6210-2Z-J	6310-2Z-J
284-286TC, TD, JP, JPY, JM	R, RF, R-1 R-2, R-4	6210-2ZJ	6312-J
284-286T, TS	RC	6210-J	6310-J
284-286T, TS	D	6207-2Z-J/C3	6211-2Z-J/C3
284-286TC	D	6207-2Z-J/C3	6311-2Z-J/C3
284-286T, TS	T, TC	6210-2Z-J/C3	6310-2Z-J/C3
284-286TC, JP, JM	TC, T, TF, T-1, T-4, TC1-4	6210-2Z-J/C3	6311-J/C3
284-286TC, TD	UT	6207-2Z-J/C3	6310-2Z-J/C3
284-286JM, JP	UT1-4, D1-4	6207-2Z-J/C3	6311-2Z-J/C3
284TD	T, TF	6210-2Z-J/C3	6310-J/C3
284T, TS	L, LC	6210-J/C3	6310-J/C3
284-286TC, JM, JP	L, LF, L-1, L-4	6210-J/C3	6311-J/C3
324-326T, TS	R RC T, TC L, LC	6211-2Z-J 6211-J 6211-2Z-J/C3 6211-J/C3	6311-2Z-J 6311-J 6311-2Z-J/C3 6311-J/C3
324-326JP, JM, TC, TD	R R-1, R-4 T, T-1, T-4 L, L-1, L-4	6211-2Z-J 6211-2Z-J/C3 6211-2Z-J/C3 6211-J/C3	6313-J 6313J 6312-J/C3 6312-J/C3
364-365T	R, RC	6212-2Z-J	6215-2Z-J
364-365TS	R, RC	6212-2Z-J	6212-2Z-J

BEARING INFORMATION—CONTINUED

HORIZONTAL MOTORS–CONTINUED

Basic motor frame	Motor type	Bearing number	
		Short end	Pulley end
364-365T	T, TC	6212-2Z-J/C3	6313-2Z-J/C3
	L	6212-J/C3	6313-J/C3
364-365TS	T, TC	6212-2Z-J/C3	6212-2Z-J/C3
	L	6212-J/C3	6212-J/C3
364-365TC, TSC, TSD	R	6212-2Z-J	6316J
364-365TC	T	6212-2Z-J/C3	6314-J/C3
364-365JM, JP	R1-4	6212-2Z-J	6316-J
364-365JM, JP	T1-4, L1-4	6212-J/C3	6314-J/C3
404-405T	R, RC	6212-2Z-J	5215-H
404-405TS	R, RC	6212-2Z-J	6215-2Z-J
404-405T	T, L, TC	6214-J/C3	6217-J/C3
404-405TS	T, L, TC	6214-J/C3	6214-J/C3
404-405TSC, TSD	R	6212-2Z-J	6316-J
404JP	R1-4	6212-2Z-J	6316J
444-449T	R	6313-J	6220-J
444-449TS	R	6313-J	6313-J
444-449T	T, L	6313-J/C3	6220-J/C3
444-449TS	T, L	6313-J/C3	6313-J/C3

HORIZONTAL MOTORS–FOOT MOUNTED

Basic motor frame	Motor type	Bearing number	
		Short end	Pulley end
56	H, J, E	6203RS	6203RS
182, 184	H, J, JN, E, EN	6205	6205
213, 215	H-1, H-2, H-4, H-7, H-8, J-1, J-2, J-4, J-7, JN-1, JN-2, JN-7, E-1, E-2, E-4, E-7, EN-1, EN-2, EN-7	6205	6207
	H, H-8	6206	6206
	H-1, H4	6206	6307
	H-7	6206	6207
	HG	6207	6207
	J, JG, JN, E, EN	6205	6206
	J-1, J4, E-1, E4	6205	6307
	J-7, E-7	6205	6207
254U, 256U	H, H-7, H-8, J, J-7, JG JN, E, E-7, EN	6207	6308
	H-1, H-3, H-4, J-1, J-3 J4, E-1, E-3, E-4	6207	6310
	HG	6308	6308

EASA Technical Manual © 1996-2012, Electrical Apparatus Service Association, Inc.

BEARING INFORMATION—CONTINUED

HORIZONTAL MOTORS–FOOT MOUNTED

Basic motor frame	Motor type	Bearing number	
		Short end	Pulley end
284U, 286U	H, H-8, J, JG, JN, E, EN	6210	6310
	H-1, H-4, H-5, J-1, J-4	6210	6312
	J-5, E-1, E-4, E-5		
	H-7	6210	6211
	HG	6310	6310
324U, 324S	H, H-7, H-8, J, JG	6211	6311
326U, 326S	JN, E, EN		
	H-1, H4, H-5, H-6, H-10	6211	6313
	J-1, J-4, J-5, J-6, J-10,		
	E-1, E-4, E-5, E-6, E-10		
	HG	6311	6311
364U, 365U	H, J, JG, E	6212	6312
	H-1, H-5, H-6, H-10,	6212	6314
	J-1, J-5, J-6, J-10, E-1,		
	E-5, E-6, E-10		
	H-7	6212	6212
	HG	6312	6312
364US, 365US	H, J, E	6212	6212
404U, 405U	H, H-1, H-2, H-5, H-6,	6214	6314
	H-10, HG, J , J-1, J-2		
	J-5, J-6, J-10, E, E-1, E-2,		
	E-5, E-6, E-10		
404US, 405US	H, J, E	6214	6214
444U, 445U	H, H-5, H-6, H-10, J, J-5,	6313	1317XL
	J-6, J-10, E, E-5, E-6, E-10		
444US, 445US	H, J, E	6313	6313
1504	H	316K	6222
	J, E	316K	6222-C3
1504S	H, J, E	316K	316K
1505	H	316K	N-222-M-C3
1505S	H	316K	316K
1585	J, E	316K	N-222-M-C3
1585S	J, E	316K	316K
1587, 1589	H	6320	NJ-226-M-C3
1587S, 1589S	H	6320	6320
1585S	J, E	316K	316K
1587, 1589	H	6320	NJ-226-M-C3
1587S, 1589S	H	6320	6320

BEARING INFORMATION—CONTINUED

HORIZONTAL MOTORS–FOOT MOUNTED

Basic motor frame	Motor type	Poles	Horsepower	Bearing number	
				Short end	Pulley end
1689	H	6	450, 500, 600	6228	N-228-M-C3
			700, 800	6326M	N-228-M-C3
		8	350, 400, 450	6228	N-228-M-C3
			500, 600	6326M	N-228-M-C3
		10	250, 300, 350	6228	22228C-C3
1689S	H	6	450, 500, 600	6228	6228
			700, 800	6326M	6326M
		8	350, 400, 450	6228	6228
			500, 600	6326M	6326M
		10	250, 300, 350	6228	6228

HORIZONTAL MOTORS–FOOTLESS

Basic motor frame	Motor type	Bearing number	
		Short end	Pulley end
56	HV, JV, EV	6203RS	6203RS
182, 184	HV, JV, EV	6205	6207
213, 215	HV	6206	6307
	JV, EV	6205	6307
254U, 256U	HV, JV, EV	6207	6310
284U, 286U	HV, JV, EV	6210	6310
324U/S, 326U/S	HV, JV, EV	6211	6311
364U, 365U	JV, EV	6212	6312
364US, 365US	JV, EV	6212	6312TC

EASA Technical Manual © 1996-2012, Electrical Apparatus Service Association, Inc.

BEARING INFORMATION—CONTINUED

HORIZONTAL MOTORS–POLYPHASE

Frame	Type of motor	Front bearing	Drive bearing
56	SC-SS-SES	6204	6204
66	SC-SS-SES	6204	6204
203-204	SC-SS-SES	6204	6204
203-204	SS-SES	6205	6205
Y203-Y204	SCBY	6204	6207
224-225	SC-SAY	6206	6206
224-225	SCB	6206	6207
224-225	SS-SES-SD-SE	6306	6306
254	SCB	6207	6307
254	SC-SAY	6207	6207
254	SD-SE	6307	6307
284	SCB	6207	6307
284	SC-SAY	6207	6207
284	SD-SE	6307	6307
Y284	SCBY	6207	6307
324-326	SC-SAY-SCB-SCBY	6209	6209
324-326	SD-SE	6309	6309
Y324-Y326	SC-SAY-SCB-SCBY	6209	6209
364-365	SC-SAY-SCB-SD-SE	6311	6311
404-405	SC-SAY-SCB	6312	6312
404-405	SD-SE	6313	6313
444-445	SD-SE-SC-SAY	6313	6313
504-505	SC-SD-SE	6315	6315

EASA Technical Manual © 1996-2012, Electrical Apparatus Service Association, Inc.

BEARING INFORMATION—CONTINUED

SYNCHROGEAR UNITS

Synchro-gear type	Gear frame	Motor frame	Bearing numbers & bearing position or location								
			1	2	3	4	5	6	7	7A	8
GC	107D	—	6010	6010	6203	6204	6203	6205	—	—	—
	115D	—	6013	6013	6303	6304	6204	6206	—	—	—
	203D	—	6015	6015	6305	6305	6305	6206	—	—	—
	207D	—	6016	6016	6306	6306	6306	6208	—	—	—
	215D	—	6021	6021	6307	6308	6307	6210	—	—	—
	307D	—	6024	6024	6309	6309	6407	6210	—	—	—
	315D	—	6028	6028	6408	6312	6408	6212	—	—	—
GD	5	56	LM29710-LM29749	15125-15245	6203	6203	—	—	204KD*	—	P203P*
	10	56	6207	6304	6202	6203	—	—	6304Z	—	P203P
		182, 184	6207	6304	6202	6203	—	—	6304Z	—	6205
	21	56	LM603049-LM603011	LM48548-LM48510	LM11949-LM11910	LM11949-LM11910	—	—	6205Z	—	P203P
		182, 184	LM603049-LM603011	LM48548-LM48510	LM11949-LM11910	LM11949-LM11910	—	—	6205Z	—	6205
		213, 215	LM603049-LM603011	LM48548-LM48510	LM11949-LM11910	LM11949-LM11910	—	—	6206Z	—	6205
	30	182, 184	359A-354A	2582-2523	1280-1220	2688-2631	—	—	6306Z	—	6205
		213, 215	359A-354A	2582-2523	1280-1220	2688-2631	—	—	6306Z	—	6205
		254U, 256U	359A-354A	2582-2523	1280-1220	2668-2631	—	—	6306Z	—	6207
	40	213, 215	6313	6309	350-352	339-332	—	—	6307Z	—	6205
		254U, 256U	6313	6309	350-352	339-332	—	—	6307Z	—	6207
		284U, 286U	6313	6309	350-352	339-332	—	—	6307Z	—	6210
	50	254U, 256U	750-742	560-552A	ESJ-7255	6409	—	—	6310Z	—	6207
		284U, 286U	750-742	560-552A	ESJ-7255	6409	—	—	6310Z	—	6210
		324U, 326U	750-742	560-552A	ESJ -7255	6408	—	—	6310Z	—	6211
	61	324U, 326U	593-592A	5760-5735	HM803145-HM803110	33251-33472	—	—	6313Z	—	6211
		364U, 365U	593-592A	5760-5735	HM803145-HM803110	33251-33472	—	—	6313Z	—	6212
		404U, 405U	593-592A	5760-5735	HM803145-HM803110	33251-33472	—	—	6313Z	—	6214
GDF & GDO	5	—	LM29710 LM29749	15125 15245	6303	6203	—	—	6204C3	62042RS/C3	—
	10	—	6207	6304	6202	6203	—	—	6205	6005Z	—
	21	—	LM603049 LM603011	LM48548 LM48510	LM11949 LM11910	LM11949 LM11910	—	—	5206H	R205C	—
	30	—	359A 354A	2582 2523	1280 1220	2688 2631	—	—	6307	6207	—
	40	—	6313	6309	350 352	339 332	—	—	6309	R208E	—
	50	—	750 742	560 552A	HJ223020 IRI82220	6409	—	—	5215-H-TM	R310E	—
	61	—	593 592A	5760 5735	HM803145 HM803110	33251 33472	—	—	6314C3	6313C3	—
	70	—	99600 99100	6576 6535	5760 5735	H715345 H715311	—	—	22216C-Y/C3	6317	—
GDV (Standard Thrust)	30	213, 215	482-472	346-332	1280-1220	2688-2631	—	—	6306	—	6205
		254U, 256U	482-472	346-332	1280-1220	2688-2631	—	—	6306	—	6207
	40	213, 215	594-592A	467-454	ESJ-7215	6407	—	—	6307	—	6205
		254U, 256U	594-592A	467-454	ESJ-7215	6407	—	—	6307	—	6207
		284U, 286U	594-592A	467-454	ESJ-7215	6407	—	—	6307	—	6210
	50	254U, 256U	687-672	47487-47420	ESJ-7255	6409	—	—	6310	—	6207
		284U, 286U	687-672	47487-47420	ESJ-7255	6409	—	—	6310	—	6210
		324U, 326U	687-672	47487-47420	ESJ-7255	6409	—	—	6310	—	6211
GDV (Heavy Thrust)	30	213, 215	TDO484-472D/X25484	NJ-307-M-C3	1280-1220	2688-2631	—	—	6306	—	6205
		254U, 256U	TDO484-472D/X25484	NJ-307-M-C3	1280-1220	2688-2631	—	—	6306	—	6207
	40	213, 215	TDO594-592A/X25594	22310C-C3	ESJ-7215	6407	—	—	6307	—	6205
		254U, 256U	TDO594-592A/X25594	22310C-C3	ESJ-7215	6407	—	—	6307	—	6207
		284U, 286U	TDO594-592A/X25594	22310C-C3	ESJ-7215	6407	—	—	6307	—	6210
	50	254U, 256U	TDO687-672D/X1S687	22311C-C3	ESJ-7255	6409	—	—	6310	—	6207
		284U, 286U	TDO687-672D/X1S687	22311C-C3	ESJ-7255	6409	—	—	6310	—	6210
		324U, 326U	TDO687-672D/X1S687	22311C-C3	ESJ-7255	6409	—	—	6310	—	6211

*No substitutions.

EASA Technical Manual © 1996-2012, Electrical Apparatus Service Association, Inc.

BEARING INFORMATION—CONTINUED

SYNCHROGEAR UNITS

Synchro-gear type	Gear frame	Motor frame	Bearing numbers & bearing position or location								
			1	2	3	4	5	6	7	7A	8
GH	11	182, 184	6206	6204	—	—	—	—	6205Z	—	6205
	22	213, 215	6208	6304	—	—	—	—	6207Z	—	6205
	22C/D	213, 215	6309	6304	—	—	—	—	6207Z	—	6205
	42	254U, 256U	6309	6307	—	—	—	—	5607	—	6207
	50**	324U, 326U	3979-3920	3186-3126	—	—	—	—	5609	—	6211
GL	41	213, 215	560-552A	3779-3720	ESJ-7215#	6406#	SJ-7133	—	6307Z	—	6205
		254U, 256U	560-552A	3779-3720	ESJ-7215#	6406#	SJ-7133	—	6307Z	—	6207
		284U, 286U	560-552A	3779-3720	ESJ-7215#	6406#	SJ-7133	—	6307Z	—	6210
	50	254U, 256U	750-742	560-552A	ESJ-7255#	6409#	SJ-7154		6310Z	—	6207
		284U, 286U	750-742	560-552A	ESJ-7255#	6409#	SJ-7154	—	6310Z	—	6210
		324U, 326U	750-742	560-552A	ESJ-7255#	6409#	SJ-7154	—	6310Z	—	6211
	61	324U, 326U	71437-71750	5760-5735	HM803145-HM803110#	33251-33472#	ESJ-7215	—	6313	—	6211
		364U, 365U	71437-71750	5760-5735	HM803145-HM803110#	33251-33472#	ESJ-7215	—	6313	—	6212
		404U, 405U	71437-71750	5760-5735	HM803145-HM803110#	33251-33472#	ESJ-7215	—	6313	—	6214
GLF & GLO	41	—	560 552A	3779 3720	HJI82620# IRI41820#	6406#	SJ-7133	—	6309	R-208E	—
	50	—	750 742	560 552A	HJ223020# IRI82220#	6409#	SJ-7154	—	5215-H-TM	R-31OE	—
	61	—	71437 71750	5760 5735	HM803145# HM803110#	33251 # 33472#	HJI82620 IRI41820	—	6314C3	6313C3	—
GM	41	182,184	560-552A	3779-3720	ESJ-7215#	6406#	SJ-7133	5204	5506	—	6205
		213, 215	560-552A	3779-3720	ESJ-7215#	6406#	SJ-7133	5204	5506	—	6205
	50	213, 215	750-742	560-552A	ESJ-7255#	6409#	SJ-7154	5304	5508	—	6205
		254U, 256U	750-742	560-552A	ESJ-7255#	6409#	SJ-7154	5304	5508	—	6207
GMF	41	—	560 552A	3779 3720	HJI82620# IRI41820#	6406#	SJ-7133	5204	15245 15117	25580 25520	—
	50	—	750 742	560 552A	HJ223020# IRI82220#	6409#	SJ-7154	5304	LM501349 LM501310	JM207049 JM207010	—
	61	—	71437 71750	5760 5735	HM803145# HM803110#	33251# 33472#	HJI82620 IRI41820	5306	JM205149 JM205110	JM511946 JM511910	—
	70	—	99600 99100	6576 6535	5760# 5735#	H715345# H715311#	1216TS 5216A	1311TS 5311A	NJ314M	6317	—
GR	5	56	L44643-L44610	LM11749-LM11716	—	—	—	—	204KD*		P203P*
	50	284U, 286U	560-552A	3979-3920	—	—	—	—	6311Z	—	6210
		324U, 326U	560-552A	3979-3920	—	—	—	—	5611	—	6211
	60	364U, 365U	HM516449-HM516410	65390-65320	—	—	—	—	22213	—	6312
		404U, 405U	HM516449-HM516410	65390-65320	—	—	—	—	22213	—	6314
GW & GMV	5	56	6206	6206	6201	—	—	—	6304Z-C3*	—	6203-RS-C3
	6	56	L44649-L44610	L44649-L44610	6201	—	—	—	6304-2RS-C2	—	6203-RS-C3
	10	182, 184	6207	6207	6303	—	—	—	6306Z	—	6205
	11	182, 184	LM48548-LM48510	LM48548-LM48510	6303	—	—	—	6306Z	—	6205
GWB	5	56	6208Z	6305Z	6207	6206	6201	—	6304Z-C3*	—	6203-RS-C3
	10	182, 184	6211Z	6207Z-C3	6209	6207	6303	—	6303Z	—	6205
	20	—	6211	6207	2631 2684	25590 25520	HM89410 HM89449	—	HM89410 HM89449	—	—

*No substitutions.
#This location has two positions, each of which requires one each of bearings listed.
**Reducer only. For Increaser #1 = 6212 and #2 = NJ-306-M-C3.

BEARING INFORMATION—CONTINUED

SYNCHROGEAR UNITS

Synchro-gear type	Gear frame	Motor frame	Bearing numbers & bearing position or location								
			1	2	3	4	5	6	7	7A	8
GMV-A	65	280	JHM534149 JHM534110	JHM522649 JHM522610	JH415647* JH415610*	JH415647* JH415610*	65237 65500	HM617049 HM617010	JH307749 JH307710	JH307749 JH307710	6210-2Z 6210-J/C3
		320	JHM534149 JHM534110	JHM522649 JHM522610	JH415647* JH415610*	JH415647* JH415610*	65237 65500	HM617049 HM616010	JH307749 JH307710	JH307749 JH307710	6211-2Z 6211-J
		—	JHM534149 JHM534110	JHM522649 JHM522610	JH415647* JH415610*	JH415647* JH415610*	65237 65500	HM617049 HM617010	JH307749 JH307710	JH307749 JH307710	
GMV-B	65	280	JM734449 JM734410	JHM522649 JHM522610 JH415647• JH415610•	65237 65500 JH415647• JH415610•	65237 65500	E-5312-B-1R E-1312B-N/01R	1216TS 5216-A	JH307749 JH307710	JH307749 JH307710	6210-2Z 6210J/C3
		320	JM734449 JM734410	JHM522649 JHM-522610 JH415647• JH415610•	65237 65500 JH415647• JH415610•	65237 65500	E-5312-B-1R E-1312-BN/01R	1216TS 5216A	JH307749 JH307710	JH307749 JH307710	6211-2Z 6211-J
GMV	70	320	67883 67820	6576 CL-2 6535 CL-2	5760 CL-2* 5735 CL-2*	H-715345-CL-2* H-715311-CL-2*	1216TS 5216A	1311TS 5311A	6314J/C3		6311-JN
		360	67883 67820	6576 CL-2 6535 CL-2	5760 CL-2* 5735 CL-2*	H-715345-CL-2* H-715311-CL-2*	1216TS 5216A	1311TS 5311A	6314-J/C3		6313-J/C3
		400	67883 67820	6576 CL-2 6535 CL-2	5760 CL-2* 5735 CL-2*	H-715345-CL-2* H-715311-CL-2*	1216TS 5216A	1311TS 5311A	6314J/C3		6314-J
		440	67883 67820	6576 CL-2 6535 CL-2	5760 CL-2* 5735 CL-2*	H-715345-CL-2* H-715311-CL-2*	1216TS 5216A	1311TS 5311A	6314J/C		5216-H-TM
GMV-B	71	320	94687 94113	95475 95925 6580• 6535•832•	H715345 H715311 837•	HM617049 HM617010	1313TS A5313	1217TS A5217	65390 65320	JHM807045 JHM807012	6211-2J/C3
		360	94687 94113	95475 95925 6580• 6535•	H715345 H715311 837• 832•	HM617049 HM617010	1313TS A5313	1217TS A5217	65390 65320	JHM807045 JHM807012	6212-J/C3

* 2 bearings needed at this position.
• (A) position.

EASA Technical Manual © 1996-2012, Electrical Apparatus Service Association, Inc.

BEARING INFORMATION—CONTINUED

SYNCHROGEAR UNITS

Synchro-gear type	Gear frame	Motor frame	Bearing numbers & bearing position or location								
			1	2	3	4	5	6	7	7A	8
GMV-A	90	365	JHM840449	861	943	943	854	HH221434	JH415647	JH415647	6212J/C3
			JHM840410	854	932	932	861	HH221410	JH415610	JH415610	—
		400	JHM840449	861	943	943	854	HH221434	JH415647	JH415647	6214-J
			JHM840410	854	932	932	861	HH221410	JH415610	JH415610	—
		440	JHM840449	861	943	943	854	HH221434	JH415647	JH415647	6214-J
			JHM840410	854	932	932	861	HH221410	JH415610	JH415610	—
GMV-B		400	EE420801	95475	943	95475	5317	5318	JH415647	JH415647	6214-J
			421437	95925	932	95925	1317	1318	JH415610	JH415610	—
					854•	854•					
					861•	861•					
		440	EE420801	95475	943	95475	5317	5318	JH415647	JH415647	6214-J
			421437	95925	932	95925	1317	1318	JH415610	JH415610	—
					854•	854•					
					861•	861•					

Synchrogear type	Gear frame	Motor frame	Bearing numbers & bearing position or location			
			1	2	3	7*
QC QO	17	56	L-44610-224	L-44610-224	6203J/C3	FAG*
			LM-44643	LM-44643		NU-203-M-C-4
	26	56, 140	LM-67010	LM-67010	6304J	FAG*
			LM-67048	LM-67048		NU-205-M-C-4
	37	56, 140, 180	25520	25520	6306J	FAG*
			25590	25590		NU-207-N-4C

• (A) position
*Used on QO only.

BEARING INFORMATION—CONTINUED

SYNCHROGEAR UNITS–GDM

Gear frame	Motor frame	Motor type	Bearing numbers & bearing position or location						
			1	2	3	4	7	7A	8
12	140	TF	JLM506849	25877	LM11949	LM11949	LM67048	LM67048	6203-2Z
	180	TF	JLM506810	25821	LM11910	LM11910	LM67010	LM67010	6205-2Z
22	140	TF	JM511946	3479	12580	15126	LM67048	15126	6203-2Z
	180	TF	JM511910	3420	12520	15245	LM67010	15245	6205-2Z
	210	TF							6206-2Z
32	210	TF	568	3880	HM89446	HM89446	2793	LM603049	6206-2Z-J/C3
	250	TF	563	3820	HM89410	HM89410	2720	LM603011	6207-2Z-J/C3
42	250	TF	JHM318448	6280	HM801346	3877	HM801346	M804049	6207-2Z
	280	RF, TF	JHM318410	6220	HM801310	3820	HM801310	M804010	6210-2Z
	320	TF							6211-2Z
45	280	RF, TF							6210-2Z
	320	RF, TF	77375	855	HH506348	HH506348	804810	HM807049	6211-2Z
	360	RF, TF	77675	854	HH506310	HH506310	HM807049	HM807010	6212-2Z
52	280	RF, TF							6210-2Z
	320	RF, TF	67390	855	HH506348	HH506348	804810	HM807049	6211-2Z
	360	RF, TF	67322	854	NH506310	NH506310	HM804810	HM807010	6212-2Z
55	320	RF, TF	JM734449	938	5595	JH415647	JM212049	5584	6211-2Z
	360	RF, TF	JM734410	932	5535	JH415610	HM212010	5535	6212-2Z
	400	RF, TF							6214-J
	A440	TF							
	440	RF							6313-J
	440	TF							6313-J/C3
62	320	RF, TF							6211-2Z
	360	RF, TF	896	938	5595	JH415647	HM212049	5584	6212W-2Z
	400	RF, TF	892	932	5535	JH415610	HM212010	5535	6214-J
	A440	TF							
	440	TF							6213-J

SYNCHROGEAR UNITS–GDMV

Gear frame	Motor frame	Motor type	Bearing numbers & bearing position or location						
			1	2	3	4	7	7A	8
42	250	TF	JM822049	6280	HM801346	3877	HM801346	M804049	6207-2Z-J/C3
	280	TF	JM822010	6220	HM801310	3820	HM801310	M804010	6210-2Z-J/C3
52	280	TF	67390	854	HH506348	HH506348	804810	HM807049	6210-2Z
	320	TF	67322	855	HH506310	HH506310	HM804810	HM807010	6211-2Z-J/C3
62	320	TF	JHM534149	938	5595	JH415647	JM212049	5584	6211-2Z
	360	TF	JHM534110	932	5535	JH415610	HM212010	5535	6212-2Z

EASA Technical Manual © 1996-2012, Electrical Apparatus Service Association, Inc.

BEARING INFORMATION—CONTINUED

SYNCHROGEAR UNITS–GSM

Gear frame	Motor frame	Motor type	Bearing numbers & bearing position or location				
			1	2	7	7A	8
12	180	TF	JLM506849	25877	LM67048	LM67048	6205-2Z-J/C3
	210	TF	JLM506810	25821	LM67010	LM67010	6206-2Z-J/C3
22	180	TF	JM511946	3479	LM67048	15126	6205-2Z-J/C3
	210	TF	JM511910	3420	LM67010	15245	6206-2Z-J/C3
32	250	TF					6207-2Z-JC3
	280	RF	568	3880	2793	LM603049	6210-2Z-J
	280	TF	563	3820	2720	LM603011	6210-2Z-J/C3
	320	RF					6211-2Z-J
35			JHM318448	6280	HM801346	M804049	
			JHM318410	6220	HM801310	M804010	
42	280	RF					6210-2Z-J
	280	TF	JHM318448	6280	HM801346	M804049	6210-2Z-J/C3
	320	RF					6211-2Z-J
	320	TF	JHM318410	6220	HM801310	M804010	6211-2Z-J/C3
	360	RF					6212-2Z-J
							6212-2Z-J/C3
45			77375	855	HM804848	HM807049	
			77675	854	HM804810	HM807010	
52			67390	855	HM804848	HM807049	
			67322	854	HM804810	HM807010	
55			898	938	HM212049	5584	
			892	932	HM212010	5535	
62	405	TF	898	938	HM212049	5584	6214-J
	A444	TF	892	932	HM212010	5535	6214-J
	440	TF					6313-J/C3

SYNCHROGEAR UNITS–GTM

Synchro-gear type	Gear frame	Motor frame	Bearing numbers & bearing position or location								
			1	2	3	4	5	6	7	7A	8
12	140	TF	JLM506849	25877	LM11949	LM11949	LM11749	LM11749	LM67048	LM67048	6203-2Z
	180	TF	JLM506810	25821	LM11910	LM11910	LM11710	LM11710	LM67010	LM67010	6205-2Z
22	140	TF	JM511946	3479	12580	15126	LM11949	LM11749	LM67048	15126	6203-2Z
	180	TF	JM511910	3420	12520	15245	LM11910	LM11710	LM67010	15245	6205-2Z
32	140	TF									6203-2Z-J/C3
	180	TF	568	3880	HM89446	HM89446	9067	9067	2793	LM603049	6205-2Z-J/C3
	210	TF	563	3820	HM89410	JM89410	9195	9195	2720	LM603011	6206-2Z-JC3
42	140	TF									6203-2Z
	180	TF	JHM318448	6280	HM801346	3877	3659	21075	HM801346	M804049	6205-2Z
	210	TF	JHM318410	6220	HM801310	3820	3620	21212	HM801310	M804010	6206-2Z
	250	TF									6207-2Z
45	210	TF									6206-2Z
	250	TF	77375	855	HH506348	HH506348	3872	HH88648	33885	468	6207-2Z
	280	RF, TF	77675	854	HH506310	HH506310	3820	HH88610	33821	453X	6210-2Z
52	210	TF									6206-2Z
	250	TF	67390	855	HH506348	HH506348	3872	HM88648	33885	468	6207-2Z
	280	RF, TF	67322	854	NH506310	NH506310	3820	HM88610	33821	453X	6210-2Z
55	250	TF	JM734449	938	5595	JH415647	5356	3877	HM212049	HM212049	6207-2Z
	280	RF, TF	JM734410	932	5535	JH415610	5335	3820	HM212010	HM212010	6210-2Z
	320	RF, TF									6211-2Z
62	250	TF									6207-2Z
	280	RF, TF	898	938	5595	JH415647	5356	3877	HM212049	5584	6210-2Z
	320	RF, TF	892	932	5535	JH415610	5335	3820	HM212010	5535	6211-2Z
	360	RF, TF									6212-2Z

BEARING INFORMATION—CONTINUED

SYNCHROGEAR UNITS–GTMV

Synchro-gear type	Gear frame	Motor frame	Bearing numbers & bearing position or location								
			1	2	3	4	5	6	7	7A	8
42	210	TF	JM822049	6280	HM801346	3877	3659	21075	HM801346	M-804049	
			JM822010	6220	HM801310	3820	3620	21212	HM801310	M-804010	6206-2ZJ/C3
52	250	TF	67390	854	HH506348	HH506348	3872	HM88648	33885	468	6207-2Z
	280	TF	67322	855	HH506310	HH506310	3820	HM88610	33821	453X	6210-2Z
62	280	TF	JHM534149	938	5595	JH415647	5356	3877	HM212049	HM212049	6210-2Z
	320	TF	JHM534110	932	5535	JH415610	5335	3820	HM212010	HM212049	6211-2Z

VARIDRIVE MOTORS & MOTOMOUNT VARIDRIVES (NON-GEARED UNITS)

Type	Frame	Motor frame	Bearing numbers & bearing position or location				
			7	7A	8 - Z Flow	8 - C Flow	8A
ALL EXCEPT VEF, VEUF, VEVF, VEV-1-F	1	48, 56	6203-2RS-J/C3	—	—	6302-2RS-J	—
	6	56, 140	6204-2Z-J/C3	—	6203-2RS-J/C3	6203-2RS-J/C3	—
	6	CORRO-DUTY	6204-2Z-J/C3	—	6203-2RS-J/C3	6203-2RS-J/C3	—
	10	140TF	6205-2RS-J/C3	—	6203-2RS-J/C3	6203-2RS-J/C3	—
	14	182, 184	6206	—	6205	6204	—
	14	213, 215	6206	—	6205	6204	—
	15	182, 184TF	6206-RS-J/C3	—	6204-RS-J/C3	6204-RS-J/C3	—
	15	182, 184LF	6206-RS-J/C3	—	6204-RS-J/C3	6204-RS-J/C3	—
	23	213, 215TF	6206-J	—	6204-J/C3	6205	—
	23	213, 215LF	6206-J	—	6204-J/C3	6205	—
	25	21OTF	6208-2Z-J/C3	—	6206-2Z-J/C3	6206-2Z-J/C3	—
	44	254U, 256U	6208	—	6209	6207	—
	44	284U, 286U	6208	—	6209	6207	—
	54	284U, 286U	6311	6213	6211	6211	—
	54	324U, 326U	6311	6213	6211	6211	—
	54	364U, 365U	6311	6213	6211	6211	—
	55	250	6311-J	—	6208-2RS-J	6309-2RS-J	—
	55	280	6311-2RS-J	—	6208-2RS-J	6309-2RS-J	—
	55	280	6311-J	—	6208-2RS-J	6309-2RS-J	—
	55	320	6311-J	—	6208-2RS-J	6309-2RS-J	—
	55	360	6311-J	—	6208-2RS-J	6309-2RS-J	—
	65	364U, 365U	6314	6216	6211	6314	—
	65	404U, 405U	6314	6216	6211	6314	—
	70	404U, 405U	6314	6216	6211	6314	6211
	70	444U, 445U	6314	6216	6211	6314	6211
	83	444U, 445U	6312	—	6215	—	6215
	84	444U, 445U	6315	—	6215	—	6215

EASA Technical Manual © 1996-2012, Electrical Apparatus Service Association, Inc.

BEARING INFORMATION—CONTINUED

VARIDRIVE MOTORS & MOTOMOUNT VARIDRIVES (NON-GEARED UNITS)–CONTINUED

Frame	Motor frame	Bearing numbers & bearing position or location					
		9	10	11	12	13	14
1	48, 56	6205-2Z-J/C3	6203-2Z-J/C3	–	–	–	–
6	56, 140	6207-2Z-J/C3	6205-2Z-J/C3	6203-2Z-J/C3	–	–	–
6	CORRO-DUTY	6207-2Z-J/C3	6205-2Z-J/C3	6203-2RS-J/C3	–	–	–
10	140TF	6008-2Z-J/C3	6305-2RS-J/C3	6203-2Z-J/C3	–	–	–
14	182, 184	5207	6205	6205	–	7504	–
14	213, 215	5207	6206	6206	–	7504	–
15	182, 184TF	6210-Z-J	6206-RS-J/C3	6205-2Z J/C3	–	–	–
15	182, 184LF	6210-Z-J	6206-RS-J/C 3	6205-J/C3	–	–	–
23	213, 215TF	5211-J-TM	6207-J	6205 J/C3	AA-650-6	6204-2Z-J/C3	–
23	213, 215LF	5211-J-TM	6205-J/C3	6205-J/C3	AA-650-6	6204-2Z-J/C3	–
25	21OTF	6212-Z-J	6308-J/C3	–	–	–	–
44	254U, 256U	5212	6309	6207	AA-1049-14	7504	–
44	284U, 286U	5212	6309	6210	AA-1049-14	7504	–
54	284U, 286U	5216	6311	6310	B-128	CS-3464	55504
54	324U, 326U	5216	6311	6311	B-128	CS-3464	55504
54	364U, 365U	5216	6311	6312	B-128	CS-3464	55504
55	250	5218-M-TM	6213-J/C3	6309-2Z-J/C3	B-128	6204-2Z-J/C3	55504
55	280	5218-M-TM	6213-J/C3	6310-2RS-J/C3	B-128	6204-2Z-J/C3	55504
55	280	5218-M-TM	6213-J/C3	6310-J/C3	B-128	6204-2Z-J/C3	55504 LIC
55	320	5218-M-TM	6213-J/C3	6311-J	B-128	6204-2Z-J/C3	55504 LIC
55	360	5218-M-TM	6213-J/C3	6313-J/C3	B-128	6204-2Z-J/C3	55504 LIC
65	364U, 365U	5216	6314	6312	B-128-1R-812	7504	55504
65	404U, 405U	5216	6314	6314	B-128-1R-812	7504	55504
70	404U, 405U	5216	6314	6214	B-128-1R-812	7504	55504
70	444U, 445U	5216	6314	6313	B-128-1R-812	7504	55504
83	444U, 445U	5220	6314	6313	B-1612-1R-1316	7504	55504
84	444U, 445U	5220	6315	6313	B-1612-1R-1316	7504	55504

EASA Technical Manual © 1996-2012, Electrical Apparatus Service Association, Inc.

BEARING INFORMATION—CONTINUED

VARIDRIVES

Type	Frame	Bearing numbers & bearing position or location				
		7*	7A	8	8 - Z Flow	8 - C Flow
VEF, VEUF, VEVF, VEV-1-F	14	6206	—	6205	—	6205
	23	6206	—	6207	—	6205
	25	6208-2Z-J/C3	—	6206-2Z-J/C3	6206-2Z-J/C3	6206-2Z-J/C3
	44	6208	—	6209	—	6207
	54	6311	6213	6211	—	6211
	55	6311J	—	6208-2RS-J	6309-2RS-J	6211J

* For VARIDRIVES only. When a SYNCROGEAR is used, obtain correct No. 7 bearing size from VARIDRIVE–SYNCROGEAR Bearing Table.

VARIDRIVES–CONTINUED

Type	Frame	Bearing numbers & bearing position or location				
		9	10	12	13	14
VEF, VEUF, VEVF, VEV-1-F	14	5207	6205	—	7504	—
	23	5209	6206	AA-650-6	7504	—
	25	6212-2Z-J	6209-2Z-J	—	—	—
	44	5212	6208	AA-1049-14	7504	—
	54	5216	6311	B-128	CS3464	55504
	55	5218-M-TM	6311-J/C3	B-128	6204-2Z-J/C3	55504

VARIDRIVE–SYNCROGEAR MOTORS, MOTOMOUNT VARIDRIVE–SYNCROGEARS & AERO TEST STANDS (INCREASER RATIO)

Syncrogear type	Gear frame	Varidrive	1	2	7†
GH	50	54	6212	NJ-306-M-C3	7309<
GHDT	41	44, 54	6207Z-C3*	6304-C3*	5508
GHT	41	44, 54	6207Z-C3	6304-C3	5508
	50	54	6308Z-C3	NJ-305-M-C3	7309<
GSDT	40	65	6309Z-C3*	6405-C3*	5611
	50	65, 70	6309Z-C3*	6407-C3*	5611
	50	83, 84	6309Z-C3*	6407-C3*	6311
	51	65	6309Z-C3*	6405-C3*	5611
	52	83, 84	6309Z-C3*	6407-C3*	6311
GST	40	65	6309Z-C3	6405-C3	5611
	41	54	6309Z-C3	6405-C3	5611
	50	54, 65, 70	6309Z-C3	6407-C3	5611
	50	83, 84	6309Z-C3	6407-C3	6311
	51	65	6309Z-C3	6405-C3	5611
	52	83, 84	6309Z-C3	6407-C3	6311

• For VARIDRIVES only. When a SYNCROGEAR is used, obtain correct No. 7 bearing size from VARIDRIVE–SYNCROGEAR Bearing Table.
< Two bearings in this position.
* Unit has two identical bearing positions requiring one each of bearing listed at both positions.
† Assemble single-shielded bearings with open side toward pinion.

EASA Technical Manual © 1996-2012, Electrical Apparatus Service Association, Inc.

BEARING INFORMATION—CONTINUED

SYNCROGEAR

VARIDRIVE–SYNCROGEAR MOTORS, MOTOMOUNT VARIDRIVE–SYNCROGEARS & AERO TEST STANDS (REDUCER RATIO)

Syncrogear type	Gear frame	Varidrive frame	Bearing numbers & bearing position or location						
			1	2	3	4	5	6	7 ■
GB	60	65, 70	750-742	6280-6220	—	—	—	—	5315
GD	5	6	LM29710	15125-15245	6203	6203	—	—	204KD<
	5	6	LM29749						
	10	14	6207	6304	6202	6203	—	—	6204Z
	21	6, 14, 15, 23	LM603049	LM48548	LM11949	LM11949	—	—	6205Z
	21	6, 14, 15, 23	LM603011	LM48510	LM11910	LM11910			
	30	14, 15, 23	359A-354A	2582-2523	1280-1220	2688-2631	—	—	6306Z
	40	14, 23	6313	6309	350-352	339-332	—	—	6207Z
	40	44	6313	6309	350-352	339-332	—	—	5507
	50	54, 65	750-742	560-652A	ESJ-7255	6409	—	—	5609
	61	65, 70	593-592A	5760-5735	HM803145	33251	—	—	5315
	61	65, 70			HM803110	33472			
GDV (Standard Thrust)	30	23	482-472	346-332	1280-1220	2688-2631	—	—	5206
	40	23	594-592A	467-454	ES-7215	6407	—	—	6207
	40	44	594-592A	467-454	ES-7215	6407	—	—	5207
	40	54	594-592A	467-454	ESJ-7215	6407	—	—	7207 +
	50	54	687-672	47487-47420	ESJ-7255	6409	—	—	5309
GDV (Heavy Thrust)	30	23	TDO484-472D/X25484	NJ-307-M-C3	1280-1220	2688-2631	—	—	5206
	40	23	TDO594-592A/X25594	22310C-C3	ESJ-7215	6407	—	—	6207
	40	44	TDO594-592A/X25594	22310C-C3	ESJ-7215	6407	—	—	5207
	40	54	TDO594-592A/X25594	22310C-C3	ESJ-7215	6407	—	—	7207+
	50	54	TDO687-672D/X1S687	22311C-C3	ESJ-7255	6409	—	—	5309
GH	10	14	6205	6202	—	—	—	—	6204Z
	1OC/D	14	6206	6202	—	—	—	—	6204Z
	21	14, 23	6208	6204	—	—	—	—	5506
	22	15	6208	6304	—	—	—	—	6207Z
	41	44	6210	5304	—	—	—	—	5508
	50	54	3979-3920	3188-3126	—	—	—	—	7309+
GL	41	44	560-552A	3779-3720	ESJ-7215•	6406•	SJ-7133	—	5507
	50	54, 65	750-742	560-552A	ESJ-7255•	6409•	SJ-7154	—	5609
	61	65, 70	71437	5760-5735	HM803145	33251	ESJ-7215	—	5315
	61	65, 70	71750		HM803110•	33472•			
GM	41	14, 15, 23	560-552A	3779-3720	ESJ-7215•	6406•	SJ-7133	5204	5506
	50	44	750-742	560-552A	ESJ-7255•	6409•	SJ-7154	5304	5508
GR	5	6	L44643	LM11749	—	—	—	—	6204-2RS
	5	6	L44610	LM11716					
GS	10	14	6206Z	6203	—	—	—	—	6204Z
	31	23	6209	6304-C3	6305	—	—	—	5506
	41	44	3979-3920	3188-3120	—	—	—	—	5609
	50	54	560-552A	3979-3920	—	—	—	—	5611
GW & GWV	1	1	L44649	L44649	6201	—	—	—	6204-2RS
	1	1	L44610	L44610					
	6	6	L44649	L44649	6201	—	—	—	6205-2RS
	6	6	L44610	L44610					
	10	14	6207	6207	6303	—	—	—	6305Z
	11	6, 14	LM48548	LM48548	6303	—	—	—	6306-2RS
	11	6, 14	LM48510	LM48510					
GWB	6	6	6208Z	6206	LM29710	L44649	6201	—	6205-2RS
	6	6			LM29749	L44610			
	10	6, 14	6211Z	6207Z	6209	6207	6303	—	6306-2RS
	20	15	6211	6207	2631-2684	25590	HM89410	—	HM89410
	20	15				25520	HM89449		HM89449

< No substitutions.
+ Two bearings in this position.
■ Assemble single-shielded bearings with open side toward pinion.
• Unit has two identical bearing positions requiring one each of bearing listed at both positions.

BEARING INFORMATION—CONTINUED

VARIDYNE POWER UNITS

Varidrive frame	Motor frame	Alternator frame	Bearing numbers & bearing position or location						
			6A•	7	7A	Z assembly 8	C assembly 8A	9+	(SKF)
14	182, 184	3, 4 1/2, 7 1/2	W206PP	6207	—	6205	6204	—	5207
15	182, 184	6, 9, 12	6206Z	6207Z	—	—	—	—	6209Z
23	213, 215	7 1/2, 11, 15	W206PP	6308	—	6207	6205	—	5209
23	213, 215	20	W306PP	6308	—	6207	6205	—	5209
44	254U, 256U	11, 15, 20, 26, 32, 40	W306PP	6312	—	6209	6207	—	5212
54	284U, 286U	20, 26, 32, 40	W306PP	6312	6213	6211	6211	—	5214
54	324U	20, 26, 32, 40	W306PP	6312	6213	6211	6211	—	5214
54	326U	32, 40	W306PP	6312	6213	6211	6211	—	5214
54	326U	48	6312	6312	6213	6211	6211	—	5214
54	364U, 365U	48, 60	6312	6312	6213	6211	6211	—	5214
65	365U	48, 60, 75	6312	6219	6216	6211	6314	—	5216
65	404U	48, 60, 75, 90	6312	6219	6216	6211	6314	—	5216
70	405U	60, 75, 90, 120, 150	6312	6219	6216	6211	6314	6211	5216
83	445U	90, 120, 150	6312	6315	—	6215	—	6215	5220
84	445U	120, 150	6312	6315	—	6215	—	6215	5220

Varidrive frame	Motor frame	Alternator frame	Bearing numbers & bearing position or location				
			10	11	12	13	14
14	182, 184	3, 4 1/2, 7 1/2	6205	6205	—	7504	—
15	182, 184	6, 9, 12	6206Z	6205	—	—	—
23	213	7 1/2, 11, 15	6306	6206	AA-650-6	7504	—
23	213	20	6306	6206	AA-650-6	7504	—
44	256U	11, 15, 20, 26, 32, 40	6309	6207	AA-1049-14	7504	—
54	286U	26, 32, 40	6311	6310	B-128	CS3464	55504
54	324U	26, 32, 40	6311	6311	B-128	CS3464	55504
54	326U	32, 40	6311	6311	B-128	CS3464	55504
54	326U	48	6311	6311	B-128	CS3464	55504
54	364U, 365U	48, 60	6311	6312	B-128	CS3464	55504
65	365U	48, 60, 75	6314	6312	B-128, 1R-812	7504	55504
65	404U	48, 60, 75, 90	6314	6314	B-128, 1R-812	7504	55504
70	405U	60, 75, 90, 120,150	6314	6214	B-128, 1R-812	7504	55504
83	445U	90, 120, 150	6314	6313	B-1612, 1R-1316	7504	55504
84	445U	120, 150	6315	6313	B-1612, 1R-1316	7504	55504

• Slip ring end of alternator.
+ No substitutions.

EASA Technical Manual © 1996-2012, Electrical Apparatus Service Association, Inc.

BEARING INFORMATION—CONTINUED

VERTICAL HOLLOW SHAFT & SOLID SHAFT MOTORS–HIGH THRUST & EXTRA HIGH THRUST

Basic motor frame	Motor type	Upper bearing				Lower bearing	
		High thrust		Extra high thrust 4 pole & up			
		2 pole	4 pole & up	175%	250%	2 pole	4 pole & up
182, 184, 213, 215	HU, HUC, HUR, HV-4, JU, JUN, JV-4, JVN-4, EU, EUN, EV-4, EVN-4	7210B-TC	7210B-TC	–	–	6207	6207
254, 256U	HU,HUC,HV-4	6207	6207	–	–	7310B-T	7310B-Y
	JU,JV-4,EU,EV-4	6207	6207	–	–	7310B-T	7310B-T
284U, 286U	HU,HV-4	7217B-TC	7217B-Y	7217BG-Y*	–	6210	6210
	JU,JV-4,EU,EV-4	6210	6210	–	–	731OBG-TC*	731OBG-TC*
A286U	RU	7218B-Y	7218B-Y	–	–	6210	6210
324U, 326U	HU,HV-4	7220-TC	7220M	7220G-M*	–	6211	6211
	JU,JV-4,EU,EV-4	6211	6211	–	–	7311BG-TC*	7311BG-TC*
	RU	7220M	7220M	–	–	6211	6211
A324U, A326U	RU	–	7218B-Y	–	–	–	6210
364U, 365U	HU,HV-4	7318B-TC	7318B-M	7318BG-M*	–	6212	6212
	JU,JV-4,EU,EV-4	6212	6212	–	–	7312BG-TC*	7312BG-TC*
	RU	7222M	7222M	–	–	6212	6212
A364U, A365U	RU	7220M	7220M	–	–	6211	6211
404U, 405U	HU,HV-4	7320-TC	7320M	7320G-M*	–	6215	6215
	JU,JV-4,EU,EV-4	–	7320M	7320G-M*	–	–	6017Z
	RU	7322-TC	7322M	–	–	–	6213
A404U, A405U	HU,HV-4	7318B-TC	7318B-M	7318BG-M*	–	6212	6212
	RU	–	7222M	7222M*	–	–	6212
444U, 445U	HU,HV-4	–	7322M	7322G-M*	–	–	6218
	JU,JV-4,EU,EV-4	–	7320M*	7320G-M*	–	–	6017Z
A444U, A445U	RU	–	7322M	29324MC	–	–	6213
587	CFU,CFV	–	7226G-M*	7226G**	29426✔	–	6220
	SDU,SDV,SEU,SEV	–	6219	–	–	–	7322G-M*
685, 689	CFU,CFV	–	7230G-M*	7230G-M**	29426*✔★	–	6320
1445	RU	–	29322MC	29324	29422	–	6213
1446	RU	–	29322MC		–	–	6218
1504, 1505	HU	–	7226G-M*	7226*	29426MC*✔★	–	6219
1585	JU,EU	–	7226G-M*	29330MC✔	–	–	6222C3
1587, 1589	HU	–	7228	7228M*	29430	–	6220
1689	HU	–	7230M*	29334MC✔	29430MC*✔★	–	6320

For normal thrust vertical solid shaft motors and right angle geared pump drives, see next page.

✔ Spherical roller bearings. ★ Requires water cooling coil.
* Two stacked bearings. ** Four stacked bearings.

BEARING INFORMATION—CONTINUED

VERTICAL SOLID SHAFT MOTORS–NORMAL THRUST

Basic motor frame	Motor type	Bearing number	
		Upper bearing	Lower bearing
56	HV, JV, EV	6203RS	6203RS
182 184	HV, JV, JVN, EV, EVN	6205	6207
	HVR	6307	6307
213 215	HV, JV, EV	6205	6307
	HVC, HVR	6307	6307
254U, 256U	HV, JV, EV	6207	6310
	HVC	6310	6310
A286U	RV	6210-2Z	6310-2Z
284U, 286U	HV, JV, EV	6210	6310
A324U, A326U	RV	6210-2Z	6310-2Z
324U, 326U	RV	6211-2Z	6311-2Z
	HV, JV, EVC	6211	6311
A364U, A365U	RV	6211-2Z	6311-2Z
364U, 365U	RV	6212-2Z	6312-2Z
	HV	6212	6312TC
	JV, EV	6212	6312
A404U, A405U	RV	6212-2Z	6312-2Z
	HV	6212	6312TC
404U, 405U	RV	6214-2Z	6313TC
	HV	6214	6314✔
	JV, EV	6313	6317★
A444U, A445U	RV	6214-2Z	6314-2Z
444U, 445U	HV	6313	6315✔
	JV, EV	6313	6317★
587	CFV	7226G-M*	6220
	SDV, SEV	6219-Z	6322
1445	RV	6214-2Z	6314-2Z

★ For 2 pole, use 6313.
✔ For 2 pole, use 6313TC.
* Two stacked bearings.

RIGHT ANGLE GEARED PUMP DRIVES

Frame	Bearing positions			
	Position #1 - Tapered roller	Position #2 - Tapered roller	Upper bearing	Lower bearing
21	2729/2788A	2924/2984	7211 B-Y	6009-J
40	JM205110/JM205149	JM207010/JM207049	7312 B-Y	6210-J
60	3984/3920	3984/3920	7314 B-Y	6211-J
80	5535/5584	5535/5584	7318 B-M	6212-J
100	5535/5584	5535/5584	7318 B-M	6212-J
125	JH415610/JH415647	JH415610/JH415647	7320 M	6216-J
152	JH415610/JH415647	JH415610/JH415647	7320 M	6216-J
300	JH415610/JH415647	JH415610/JH415647	7320 M-G	6216-J

EASA Technical Manual © 1996-2012, Electrical Apparatus Service Association, Inc.

BEARING INFORMATION—CONTINUED

VERTICAL HOLLOW SHAFT & SOLID SHAFT MOTORS–HIGH THRUST & EXTRA HIGH THRUST

Basic motor frame	Motor type	Upper bearing					Lower bearing	
		High thrust		Extra high thrust				
		2 pole	4 pole	175%	250%	300%	2 pole	4 pole
280	LU			6211 J/C3# 6211 J/C3			Q30311 DTUL*'	 7311B-YG*
320	LU, TU			6212 J/C3# 6212 J/C3			Q30312 DTUL*	 7312B-YB*
320, 360	RU			7220 MG*				6211 J
360	LU, TU			6213 J/C3				7314 BYG*
400	RU			7222 BAMCG*				6212 J
404, 405	LU, TU			7222 BAG*				6218 J/C3
A444	LU, TU			7222 BAG*				6218 J/C3
444, 445UP, UPH	EU JU			7320 MG*				6017 ZJ
440VP, VPA	RV-4		7322 GM 7222 GM					6215 J
444, 445	RU			29422 MC	 29422 MC			6215 J 6215 J
5007P, PH	HV-4			(1)7322 GM (1)7322 GM				6219 J
5008P, PH	EV-4, JV-4			(1)7322 GM (1)7222 GM				6219 J
1504, 5006	HU		7226 WO*					6219 J
1505, 5008	HU			7226 WO**				6219 J
A1507P, PH	HU					29426		6219 J
1587, 1589	HU			V30228**				6220 J
5008P, PH	EV-4, JV-4			(1)7322 GM (1)7322 GM				6219 J
5800	HU					29430		6220 J
5805P, PH	EU, JU			7226 PW WO-MBR-SU				6222 J/C3
5807			7226	 7226*				6222 6222
1689P, PH	HU		7230 MG					6320 J
6808	HU			29334 MC	 29430			6320 J 6320 J
1689P, PH						(2)29434 MC (3)29438 MC	6320 J 6320 J	
6810						29438		6226

(1) 7000# down
4000# up
(2) 360%
(3) 500%

* Qty. 2 bearings used
\# 2 pole
** Qty. 3 bearings

BEARING INFORMATION—CONTINUED

VERTICAL PUMP MOTORS & DRIVES

Frame	Type	Upper bearing	Lower bearing
180	LU	6208 J	7309 B-Y
180 TP	TU	6208-2Z-J/C3	7309 B-Y
180 VP	LV, LV-9	6205-2Z-J/C3	6307 Z J/C3
180 TCV	LV, LV-9	6205-2Z-J/C3	6307 ZJ
180 JMV, HP	LV, LV-9, TV, TV-9	6205-2Z-J/C3	5307 H
180 VP, TCV	TV-TV-9	6205 2Z J/C3	6307 Z J/C3
180 VP, TCV	EV	6205 J/C3	6308 J/C3
180 HP, JMV	EV	6205 J/C3	5307-H
182, 184 HP	AV, AV-9	6205-2Z-J/C3	5307 H
182, 184 VP, TCV	AV, AV-9	6205-2Z-J/C3	6307-Z J/C3
182, 184 TP	AU	6208 2Z-J/C3	7309 B-Y
210 VP, TCV	LV, LV-9 TV-TV-9	6206-2Z-J/C3	6309 J/C3
210 JMV, HP	LV-LV-9 TV-TV-9	6206-2Z-J/C3	5211 H
210	LU	6208 J	7309 B-Y
210 TP	TU	6208-2Z-J/C3	7309 B-Y
210 VP, TCV	EV	6206 J/C3	6309 J/C3
210 HP, JMV	EV	6206 J/C3	5211-H
213, 215 TP	AU	6208 2Z-J/C3	7309 B-Y
213, 215 P	AUC, AUR	6208-2Z-J/C3	7309 B-Y
213, 215 TCV, VP	AV, AV-9	6206-2Z-J/C3	6309 J/C3
213, 215 JMV, VP	AV, AV-9	6206-2Z-J/C3	5211-H
250 VP, VPH, TCV	EV	6207 J/C3	6310 J/C3
HP, HPH, TMV	EV	6207 J/C3	5212 H
250	LU	6210 J/C3	7310 B-Y#; for 2 pole, use 7310 B-T
254, 256 TP, TPH	AU	6210-2Z-J/C3	7310 B-Y#; for 2 pole, use 7310 B-T
254, 256 UP, PH	AUC, AUR	6210-2Z-J/C3	7310 B-Y#; for 2 pole, use 7310 B-T
254, 256 TCV, VP, VPH	AV, AV-9	6207-2Z-J/C3	6310-J/C3
254, 256 JMV, HP, HPH	AV, AV-9	6207-2Z-J/C3	5212 H
254 TCV	EV	6207 J/C3	6310 J/C3
A250 TCV	EV	6210 J/C3	6311 J/C3
250 TP, TPH	TU	6210 2Z-J/C3	7310 B-Y#; for 2 pole, use 7310 B-T
250 VP, VPH	TV-TV-9	6207-2Z-J/C3	6310 J/C3
250 JMV, HP, HPH	TV-TV-9	6207-2Z-J/C3	5212 H
250 VP, VPH, TCV	LV, LV-9	6207-2Z-J/C3	6310 J/C3
250 JMV, HP, HPH	LV, LV-9	6207-2Z-J/C3	5212 H

EASA Technical Manual © 1996-2012, Electrical Apparatus Service Association, Inc.

BEARING INFORMATION—CONTINUED

VERTICAL PUMP MOTORS & DRIVES

Frame	Type	Upper bearing	Lower bearing
280	TU	6210 J/C3	7310 B-T
280	RU	6209 2ZJ	Q30311
280 HPH, HPHA, HPZ, JMV	LV-LV-9	6210 J/C3	5213 H
280 VPZ, VPAZ, VPHZ, TCV	LV, LV-9 EV	6210-J/C3	6311 J/C3
280 VPZ, VPAZ, VPHZ, TCV, HPH, HPZ, HPHA, JMV	RV, RV-9	6209 2 ZJ 6209 2ZJ	6311 J/C3 5213 H
280	LU	6211 J/C3	7311 B-YG Q30311#
280 VPZ, VPAZ, VPHZ, TCV	TV-TV-9	6207 J/C3	6310 J/C3
280 HPH, HPHA, HPZ, JMV	TV-TV-9	6207 J/C3	5212 H
280 HPH, HPHA, HPZ, JMV	LV-LV-9 EV	6210 J/C3	5213 H
A280 TCV	EV	6211 J/C3	6311 J/C3
284 TCV	EV	6210 J/C3	6311 J/C3
320	LU	6212 J/C3 6212 J/C3	7312 B-Y Q30312#
320	TU	6212 J/C3 6212 J/C3	Q30312# 7312 B-Y
320 TCV VP, VPH HP, HPH, JMV	RV-RV-9	6211 2ZJ 6211 2ZJ 6211 2ZJ	6214 J 6311 J 5312 H
320 HP, HPH JMV TCV, VP, VPH	LV-LV-9	6211 J/C3 6211 J/C3 6211 J/C3	5312 H 5313 H/C3 6312 J/C3
320	RU	7220 M	6211 J
320 JMV TCV, VP, VPH HP, HPH	TV-TV-9	6211 J/C3 6211 J/C3 6211 J/C3	5312 H 6312 J/C3 5312 H
A320 TCV	EV	6212 J/C3	6314 J/C3
360	LU	6213 J/C3	7314 B-Y
360	TU	6213 J/C3	7314 B-Y
360	RU	7220 M	6211 J
A360 TCV	EV	6214 J/C3	6315 J/C3
360 TCV, VP, VPH, VPZ, VPHZ HP, HPHA, HPH, HPZ TCV, VP, VPH, VPZ, VPHZ HPH, HPA, HPHA, HPZ	LV-LV-9	6212 J/C3 6212 J/C3 6212 J/C3 6212 J/C3	6314 J/C3 5217-H 6314 J/C3# 5312 H#

(2) pole

BEARING INFORMATION—CONTINUED

VERTICAL PUMP MOTORS & DRIVES

Frame	Type	Upper bearing	Lower bearing
360 TCV VP, VPH, VPZ, VPHA HP, HPH, HPHA, HPZ	TV-TV-9	6212 J/C3 6212 J/C3	6314 J/C3 5217 H
360 TCV, VP VPH, VPZ, VPHZ H P, HPH, HPHA, HPZ	TV-TV-9	6212 J/C3 6212 J/C3 6212 J/C3	6314 J/C3# 6314 J/C3# 5312-H#
360 TCV VP, VPA, VPZ, VPAZ HP, HPZ	RV-RV-9	6211 2ZJ 6211 2ZJ 6211 2ZJ	6214 J 6311 J 5312 H
400 TCV VP, VPA, VPZ, VPAZ LP, LPA	RV-RV-9	6212 2ZJ 6212 2ZJ 6212 2ZJ	6313 J 6312 J 5312 H# For 2 pole, use 7212BG-TC
404, 405, A444	TU	7222 BA	6218 J/C3
A444, 405 VP, VPA, VPAZ HP, HPA, HPH, HPAZ	TV-TV-9	6214 J/C3	5312 H
404, 405, A444	LU	7222 BAMC	6218 J/C3
405 VP, VPA, VPZ, VPAZ	LV, LV-9	6214 J/C3	5312 H
400	RU	7222 AMC#	6212 J# For 2 pole, use 7222 BAMC
440 VP, VPA LP, LPA	RV, RV-9	6214 2ZJ 6214 2ZJ	6314 J 7212 BG-TC
444, 445 VP, VPA, VPZ 447 HP, HPA	TV-TV-9	6313 J/C3	5312 H
444, 445 UP, UPH	EU, JU	7320 WO	6017 ZJ
444, 445 UP, UPH	EV, JV	6313 J	6317 J# For 2 pole, use 6313J
A444, HP, HPA, HPH, HPHA	LV, LV-9	6214 J/C3	5312 H
445 VP, VPA, VPZ	LV, LV-9	6313 J/C3	5312 H
444, 445	RU	7322 M	6215 J
447 HP, HPA	LV-LV-9	6313 J/C3	5312 H
1505 PH, 1504 PH 5006, 5008 A1507 PH	HV	5316 H/C3	6219 J
5008 P, PH	EV, JV	6316	5316
5008 P, PH	EU, JU	7226	6219 J
1585 P, PH	EU, JU	7226 WO	6222 J/C3
1587	HU	V30228*	6220 J

* Qty. 2
\# 2 pole

EASA Technical Manual © 1996-2012, Electrical Apparatus Service Association, Inc.

WAGNER ELECTRIC CORP.

(Out of business)

DATE CODES

Prior to 1947 serial numbers were entirely digits.
Beginning in 1947 the last letter in the serial number designated year of manufacture.

D - 1950	J - 1955	P - 1960	V - 1965	A - 1970	F - 1975
E - 1951	K - 1956	R - 1961	W - 1966	B - 1971	G - 1976
F - 1952	L - 1957	S - 1962	X - 1967	C - 1972	
G - 1953	M - 1958	T - 1963	Y - 1968	D - 1973	
H - 1954	N - 1959	U - 1964	Z - 1969	E - 1974	

In 1976 Wagner dropped out of the motor manufacturing business.

TYPE DESIGNATIONS

First letter (style of housing)

- C Steel frame, totally-enclosed, fan-cooled
- D Cast iron frame, dripproof
- E Cast iron frame, totally-enclosed, fan-cooled
- H Steel frame, explosion-proof
- J Cast iron frame, explosion-proof
- R Steel frame, dripproof
- T Steel frame, totally-enclosed, non-ventilated
- X Steel or cast iron frame, splash-proof

Second letter (electrical principle)

- A Repulsion, start induction
- B Split phase
- D Direct current
- G Repulsion, induction
- H Repulsion
- K Capacitor start
- L Repulsion, start induction, brush riding
- P Polyphase, squirrel cage induction
- S Polyphase, wound rotor induction
- Y Two-value capacitor

Figure (torque and current characteristics)

- 1 NEMA, Design A or B
- 3 Low starting torque, normal slip
- 5 NEMA, Design C
- 6 NEMA, Design D
- 7 Elevator, crane, hoist duty

BEARING INFORMATION

	EP-JP & DP Insulcoat		DP		RA-RL		RK		RG	
Size	Front brg.	Rear brg.	Front brg.	Rear brg.	Front brg.	Rear brg.	Front brg.	Rear brg.	Front brg.	Rear brg.
182-4	6305	6305	6204Z	6205Z	6204Z	6205Z	6304Z	6205Z	6204	6205
2 Pole			6205Z	6205Z						
213-5	6307	6306	6205Z	6207Z	6205Z	6207Z	6304Z	6207Z	6305Z	6207Z
2 Pole			6207Z	6207Z						
254U-6U	6308	6308	6206Z	6308	6305	6308			6307	6308
2 Pole			6308	6308						
284U-6U	6310	6310	6207Z	6310						
2 Pole			6310	6310						
324U-6U	6312	6312	6308	6312						
324S-6S	6312	6312	6312	6312						
364U-5U	6313	6313	6309	6313						
364U-5US	6313	6313	6313	6313						
404U-5U	6314C3	6314C3	6310	6314C3						
404US-5US	6314C3	6314C3	6314C3	6314C3						
444U-5U	6316C3	6316C3	6312	6316C3						
444US-5US	6314C3	6314C3	6314C3	6314C3						

EASA Technical Manual © 1996-2012, Electrical Apparatus Service Association, Inc.

WEG ELECTRIC MOTORS CORP.

DATE CODES

Date codes are found after the model number on the nameplate. The description of the data code is by frame size, month and year of manufacture. For example, with **Model 254T0994** the frame size is **254T**, **09** is the month, and **94** is the year of manufacture.

MODEL NUMBERS

The WEG model numbers have up to 15 characters, as follows:

XXX	XX	XXX	X	x x x x x
hp	rpm	Model	V	Application and frame

HP **Examples**

(For IEC metric motors, output will be given in kW)

3/4 = .75
5 = 005
30 = 030
200 = 200

RPM **Examples**

36 = 3600
30 = 3000
18 = 1800
15 = 1500
12 = 1200
10 = 1000
09 = 900
07 = 750

Model **Three characters**

Enclosure	Efficiency	Phase
E = Totally-enclosed	S = Standard efficiency	1 = 1 phase
S = Severe duty	P = Premium efficient (includes EPACT motors)	3 = 3 phase
O = Open dripproof	T = Top premium efficient	
X = Explosion-proof		

Application and Frame

For definitive purpose lines, two pre-selected letters must be used after the voltage code:

KD = Crusher duty	FP = Fuel pump	ID = Inverter duty (TEFC)
SA = Saw arbor	IP = Irrigation pumping	IB = Inverter duty (TEBC)
BM = Brake motor	PF = Poultry fan	VD = Vector duty (TEBC)
OW = Oil well pumping	SP = Split phase	IE = IEEE 841 (Severe duty IEEE 841)
DP = Double pole (2 speed)	FD = Farm duty	BB = Ball bearings
CD = Compressor duty		

The following lines will not have the two letters after the voltage code:

GP = General purpose	HP = P-base pump (HP type)	IM = IEC metric
JM = Close coupled (JM type)	JC = Jet pump form “C”	
JP = Close coupled (JP type)	JJ = Jet pump form “J”	

BEARING INFORMATION

NEMA FRAMES

Motor	Frame size	Drive end	Not drive end
Prem. Eff. 3-Phase/TEFC	143T, 145T	6205-Z	6204-Z
Prem. Eff. 3-Phase/TEFC	182T, 184T	6307-Z	6206-Z
Prem. Eff. 3-Phase/TEFC	213T, 215T	6308-Z	6207-Z
Prem. Eff. 3-Phase/TEFC	254T, 256T	6309 C3	6209-Z C3
Prem. Eff. 3-Phase/TEFC	284TS, 286TS	6311 C3	6211-Z C3
Prem. Eff. 3-Phase/TEFC	324TS, 326TS	6312 C3	6212-Z C3
Prem. Eff. 3-Phase/TEFC	364TS, 365TS	6314 C3	6314 C3
Prem. Eff. 3-Phase/TEFC	405TS	6314 C3	6314 C3
Prem. Eff. 3-Phase/TEFC	444TS, 445TS	6314 C3	6314 C3
Prem. Eff. 3-Phase/TEFC	504TS, 505TS	6314 C3	6314 C3
Prem. Eff. 3-Phase/TEFC	586/7TS	6314 C3	6314 C3
Prem. Eff. XP/TEFC	143T, 145T	6205-Z	6204-Z
Prem. Eff. XP/TEFC	182T, 184T	6307-Z	6206-Z
Prem. Eff. XP/TEFC	213T, 215T	6308-Z	6207-Z
Prem. Eff. XP/TEFC	254T, 256T	6309 C3	6209-Z C3
Prem. Eff. XP/TEFC	284TS, 286TS	6311 C3	6211-Z C3
Prem. Eff. XP/TEFC	324TS, 326TS	6312 C3	6212-Z C3
Prem. Eff. XP/TEFC	364TS, 365TS	6314 C3	6314 C3
Prem. Eff. XP/TEFC	405TS	6314 C3	6314 C3
Prem. Eff. XP/TEFC	444TS, 445TS	6316 C3	6316 C3
Prem. Eff. XP/TEFC	504U, 505U	6316 C3	6316 C3
Prem. Eff. XP/TEFC	586/7	NU 322 C3	6319 C3
Gen. Purp. 3-Phase/TEFC	143T, 145T	6205-Z	6204-Z
Gen. Purp. 3-Phase/TEFC	182T, 184T	6307-Z	6206-Z
Gen. Purp. 3-Phase/TEFC	213T, 215T	6308-Z	6207-Z
Gen. Purp. 3-Phase/TEFC	254T, 256T	6309 C3	6209-Z C3
Gen. Purp. 3-Phase/TEFC	284TS, 286TS	6311 C3	6211-Z C3
Gen. Purp. 3-Phase/TEFC	324TS, 326TS	6312 C3	6212-Z C3
Gen. Purp. 3-Phase/TEFC	364TS, 365TS	6314 C3	6314 C3
Gen. Purp. 3-Phase/TEFC	405TS	6314 C3	6314 C3
Gen. Purp. 3-Phase/TEFC	444TS, 445TS	6314 C3	6314 C3
Gen. Purp. 3-Phase/TEFC	505U	6314 C3	6314 C3

EASA Technical Manual © 1996-2012, Electrical Apparatus Service Association, Inc.

BEARING INFORMATION—CONTINUED

NEMA FRAMES—CONTINUED

Motor	Frame size	Drive end	Not drive end
XProof 3-Phase/TEFC	143T, 145T	6205-Z	6204-Z
XProof 3-Phase/TEFC	182T, 184T	6307-Z	6206-Z
XProof 3-Phase/TEFC	213T, 215T	6308-Z	6207-Z
XProof 3-Phase/TEFC	254T, 256T	6309 C3	6209-Z C3
XProof 3-Phase/TEFC	284TS, 286TS	6311 C3	6211-Z C3
XProof 3-Phase/TEFC	324TS, 326TS	6312 C3	6212-Z C3
XProof 3-Phase/TEFC	364T, 365TS	6314 C3	6314 C3
XProof 3-Phase/TEFC	405TS	6314 C3	6314 C3
XProof 3-Phase/TEFC	444TS	6314 C3	6314 C3
XProof 3-Phase/TEFC	445T	NU219 C3	6316 C3
XProof 3-Phase/TEFC	505U	6316 C3	6316 C3
XProof 3-Phase/TEFC	586/7	6316 C3	6316 C3
Prem Eff. C.C. Pump JM/JP/TEFC	143JM/JP, 145JM/JMR/JP/JPR	6205-Z	6204-Z
Prem Eff. C.C. Pump JM/JP/TEFC	182JM/JP, 184JM/JMR/JP/JPR	6307-Z	6206-Z
Prem Eff. C.C. Pump JM/JP/TEFC	213JM/JP, 215JM/JMR/JP/JPR	6308-Z	6207-Z
Prem Eff. C.C. Pump JM/JP/TEFC	254JM/JP/JMR, 256JM/JMR/JP/JPR	6309-C3	6209-ZC3
Prem Eff. C.C. Pump JM/JP/TEFC	284JM/JP/JMR/JPR	6311-C3	6211-ZC3
Prem Eff. C.C. Pump JM/JP/TEFC	286JM/JP/JMR/JPR	6312-C3	6212-ZC3
Prem Eff. C.C. Pump JM/JP/TEFC	324JM/JP/JMR/JPR, 326JM/JP/JPR	6312-C3	6212-ZC3
C.C. Pump 3-Phase JM/JP/TEFC	143JM/JP, 145JM/JP	6205-Z	6204-Z
C.C. Pump 3-Phase JM/JP/TEFC	182JM/JP, 184JM/JP	6307-Z	6206-Z
C.C. Pump 3-Phase JM/JP/TEFC	213JM/JP, 215JM/JP	6308-Z	6207-Z
C.C. Pump 3-Phase JM/JP/TEFC	254JM/JP, 256JM/JP	6309-C3	6209-ZC3
C.C. Pump 3-Phase JM/JP/TEFC	284JM/JP, 286JM/JP	6311-C3	6211-ZC3
C.C. Pump 3-Phase JM/JP/TEFC	324JM/JP, 326JM/JP	6312-C3	6212-ZC3
C.C. Pump 3-Phase JM/JP/TEFC	364JM/JP, 365JM/JP	6314-C3	6314-C3
Brake 3-Phase/TEFC	143T, 145T	6205-Z	6205-Z
Brake 3-Phase/TEFC	182T, 184T	6307-Z	6207-Z
Brake 3-Phase/TEFC	213T 215T	6308-Z	6208-Z
Brake 3-Phase/TEFC	254T, 256T	6309	6211-Z
Brake 3-Phase/TEFC	284TS, 286TS	6311	6214-Z
Brake 3-Phase/TEFC	324TS, 326TS	6312	6214-Z

EASA Technical Manual © 1996-2012, Electrical Apparatus Service Association, Inc.

BEARING INFORMATION—CONTINUED

NEMA FRAMES–CONTINUED

Motor	Frame size	Drive end	Not drive end
Jet Pump 3-Phase/ODP(C)	A56C, J	6203-Z	6202-Z
Jet Pump 3-Phase/ODP(C)	B56C, J	6203-Z	6202-Z
Jet Pump 3-Phase/ODP(C)	D56C, J	6204-Z	6202-Z
Jet Pump 3-Phase/ODP(C)	F56HC, HJ	6204-Z	6203-Z
Fract. 3-Phase/TEFC/ODP (56)	A56, B56	6203-Z	6202-Z
Fract. 3-Phase/TEFC/ODP (56)	D56	6204-Z	6202-Z
Fract. 3-Phase/TEFC/ODP (56)	F56H	6204-Z	6203-Z
Gen. Purp. 1-Phase/TEFC	143T, 145T	6205-Z	6203-Z
Gen. Purp. 1-Phase/TEFC	184T	6307-Z	6206-Z
Gen. Purp. 1-Phase/TEFC	213T 215T	6308-Z	6206-Z
Gen. Purp. 1-Phase/ODP	182T, 184T	6206-Z	6205-Z
Jet Pump 1-Phase/ODP(C) (J)	56C, J	6203-Z	6202-Z
Jet Pump 1-Phase/ODP(C) (J)	B56C, J	6203-Z	6202-Z
Jet Pump 1-Phase/ODP(C) (J)	C56C, J	6203-Z	6202-Z
Jet Pump 1-Phase/ODP(C) (J)	D56C, J	6204-Z	6202-Z
Jet Pump 1-Phase/ODP(C)	F56HC, HJ	6204-Z	6203-Z
Jet Pump 1-Phase/TEFC	56C, J	6203-Z	6202-Z
Jet Pump 1-Phase/TEFC	A56C, J	6203-Z	6202-Z
Jet Pump 1-Phase/TEFC	B56C, J	6203-Z	6202-Z
Jet Pump 1-Phase/TEFC	D56J	6204-Z	6202-Z
Jet Pump 1-Phase/TEFC	F56HC, HJ	6204-Z	6203-Z
Fract. 1-Phase/ODP (56)	56, B56, C56	6203-Z	6202-Z
Fract. 1-Phase/ODP (56)	D56, F56H, G56H	6204-Z	6202-Z
Fract. 1-Phase/TEFC (56)	A56, B56	6203-Z	6202-Z
Fract. 1-Phase/TEFC (56)	D56	6204-Z	6202-Z
Fract. 1-Phase/TEFC (56)	F56H	6204-Z	6203-Z
Compr. Duty 1-Phase ODP/56	C56	6203-Z	6202-Z
Compr. Duty 1-Phase ODP/56	D56, F56H, G56H	6204-Z	6202-Z

EASA Technical Manual © 1996-2012, Electrical Apparatus Service Association, Inc.

BEARING INFORMATION—CONTINUED

IED FRAMES

Motor	Frame size	Drive end	Not drive end
Gen. Purp. 3-Phase (M)/TEFC	63, D63	6201-Z	6201-Z
Gen. Purp. 3-Phase (M)/TEFC	D71	6203-Z	6202-Z
Gen. Purp. 3-Phase (M)/TEFC	D80	6204-Z	6203-Z
Gen. Purp. 3-Phase (M)/TEFC	D90L,S	6205-Z	6204-Z
Gen. Purp. 3-Phase (M)/TEFC	D100L	6206-Z	6205-Z
Gen. Purp. 3-Phase (M)/TEFC	112M	6207-Z	6206-Z
Gen. Purp. 3-Phase (M)/TEFC	132M	6308-Z	6207-Z
Gen. Purp. 3-Phase (M)/TEFC	D132S	6308-Z	6207-Z
Gen. Purp. 3-Phase (M)/TEFC	D160L, M	6309 C3	6209-Z C3
Gen. Purp. 3-Phase (M)/TEFC	D180M	6311 C3	6211-Z C3
Gen. Purp. 3-Phase (M)/TEFC	200L	6312 C3	6212-Z C3
Gen. Purp. 3-Phase (M)/TEFC	BDF200L	6312 C3	3212-Z C3
Gen. Purp. 3-Phase (M)/TEFC	225S, M	6314 C3	6314 C3
Gen. Purp. 3-Phase (M)/TEFC	250S, M	6314 C3	6314 C3
	250 (Shaft Diam. 60M6)	6314	6314
	250 (Shaft Diam. 65M6)	6314	6314
	250 (Shaft Diam. 70M6)	NU217	6314
	280 (Shaft Diam. 65M6)	6316	6316
	280 (Shaft Diam. 75M6)	6316	6316
	280 (Shaft Diam. 80M8)	NU219	6316
	315 (Shaft Diam. 65M6)	6316	6316
	315 (Shaft Diam. 80M6)	6319	6316
	355 (Shaft Diam. 75M6)	6318	6318
	355 (Shaft Diam. 100M6)	NU322	6319
Saw Arbor 3-Phase/TEFC(SGL) (DBL)	80L, M, S	6307-Z	6207-Z
Saw Arbor 3-Phase/TEFC(SGL) (DBL)	90L	6308-Z	6208-Z
Brake 3-Phase (M)/TEFC	71	6203-Z	6204-Z
Brake 3-Phase (M)/TEFC	80	6204-Z	6204-Z
Brake 3-Phase (M)/TEFC	90L, 90S	6205-Z	6205-Z
Brake 3-Phase (M)/TEFC	100L	6206-Z	6206-Z
Brake 3-Phase (M)/TEFC	112M	6307-Z	6207-Z
Brake 3-Phase (M)/TEFC	132M, S	6308-Z	6208-Z
Brake 3-Phase (M)/TEFC	160L, M	6309 C3	6211-Z C3
Brake 3-Phase (M)/TEFC	180L, M	6311 C3	6214-Z C3
Brake 3-Phase (M)/TEFC	200L, M	6312 C3	6214-Z C3
Fract. 1-Phase (M)TEFC	63	6201-Z	6201-Z
Fract. 1-Phase (M)TEFC	71	6203-Z	6203-Z
Fract. 1-Phase (M)TEFC	80	6204-Z	6203-Z

EASA Technical Manual © 1996-2012, Electrical Apparatus Service Association, Inc.

WESTINGHOUSE ELECTRIC CORP.
WESTINGHOUSE MOTOR CO.

(Now TECO-Westinghouse Motor Co.)

WESTINGHOUSE CANADA

(Now Siemens Westinghouse, Inc.)

DATE CODES

Buffalo Plant

From 1960 on, the serial number gave the year and month of manufacture; i.e., 7606 means June 1976. Prior to 1960 the month preceded the year; i.e., 0656 means June 1956.

Lima Plant

From 1930 to 1954 the following coding was used with the month preceding the year.

A - January	G - July	U - 1950
B - February	H - August	W - 1951
C - March	I - September	X - 1952
D - April	J - October	Y - 1953
E - May	K - November	Z - 1954
F - June	L - December	

From 1955 to June 1972 the following coding was used.

M - January	T - July
N - February	U - August
O - March	W - September
P - April	X - October
R - May	Y - November
S - June	Z - December

A - 1955	F - 1960	K - 1965	P - 1970
B - 1956	G - 1961	L - 1966	R - 1971
C - 1957	H - 1962	M - 1967	S - 1972
D - 1958	I - 1963	N - 1968	
E - 1959	J - 1964	O - 1969	

From June 1972 on, a letter has been used to designate the month, and the last two digits of the year designate the year.

A - January	E - May	J - September
B - February	F - June	K - October
C - March	G - July	L - November
D - April	H - August	M - December

TYPE DESIGNATIONS

48 - 56 - 66 frames

FH - FHT - Split phase
FJ - FZ - Capacitor start
FS - Polyphase

Pre-NEMA and Original NEMA

CT,CTP - Capacitor motor
CAP, CJ, CJP - Capacitor start, induction run
CAP 2 - Capacitor start, capacitor run
CS, CSP - Three-phase, general purpose
CW, CWP - Wound rotor, general purpose
CI, CIP - Wound rotor, crane and hoist

U-frame and T-frame

First Letter

A - U-frame
F - Series H, 140T motors
G - Vertical, high thrust
S - T-frame, rolled steel
T - T-frame, cast iron

Second Letter

A, B, C, D - NEMA design letter
H - Wound rotor, hoist type
L - Capacitor start, induction run
M - Capacitor start, capacitor run
U - Special design
W - Wound rotor, general purpose
5, 7 - Oil well pump motor

Third and Fourth Letters

AM - Air over, totally-enclosed, non-ventilated
BM - Bureau of Mines
DP - Dripproof
EP - Explosion-proof
FC - Totally-enclosed, fan-cooled
FL - Frame less
LG - Life Guard
LF - Lint free textile
NV - Totally-enclosed, non-ventilated
OD - Outdoor
OP - Open
SP - Splash-proof
WP - Water-proof

EASA Technical Manual © 1996-2012, Electrical Apparatus Service Association, Inc.

BEARING INFORMATION

		Drive bearing		Front bearing	
Frame	Enclosure	Mfgr's number	AFBMA number	Mfgr's number	AFBMA number
Standard Horizontal Motors					
140T	All	205	25BC02JPP3	205	25BC02JPP3
180T	All	206	30BC02JPP3	205	25BC02JPP3
210T	DP	207	35BC02JPP3	205	25BC02JPP3
210T	Enclosed	207	35BC02JPP3	206	30BC02JPP3
250T	All	309	45BC03JPP3	207	35BC02JPP3
280T	All	311	55BC03JPP3	209	45BC02JPP3
280TS	All	209	45BC02JPP3	209	45BC02JPP3
320T	All	312	60BC03JPP3	311	55BC03JPP3
320TS	All	311	55BC03JPP3	311	55BC03JPP3
360T	All	314	70BC03JPP3	311	55BC03JPP3
360TS	All	311	55BC03JPP3	311	55BC03JPP3
400T	All	317	85BC03JPP3	312	60BC03JPP3
400TS	All	312	60BC03JPP3	312	60BC03JPP3
444T	All	319	95BC03JPX3	313	65BC03JPP3
444TS	All	313	65BC03JPP3	313	65BC03JPP3
445T	All	319★	95RN03X3★	313	65BC03JPP3
445TS	All	313	65BC03JPP3	313	65BC03JPP3
447-9T	All	319★	95RN03X3★	313	65BC03JPP3
447-9TS	All	313	65BC03JPP3	313	65BC03JPP3
D-Flange Motors–Horizontal or Vertical					
140TD	All	206	30BC02JPP3	205	25BC02JPP3
180TD	All	207	35BC02JPP3	205	25BC02JPP3
210TD	DP	209*	45BC02JPP3*	205	25BC02JPP3
210TD	Encl.	209*	45BC02JPP3*	206	30BC02JPP3
250TD	All	309	45BC03JPP3	207	35BC02JPP3
280TD	All	311	55BC03JPP3	209	45BC02JPP3
320TD	All	312	60BC03JPP3	311	55BC03JPP3
360TD	All	314	70BC03JPP3	311	55BC03JPP3
400TD	All	317	85BC03JPP3	312	60BC03JPP3
440TD	All	319	95BC03JPX3	313	65BC03JPP3
C-Flange Motors–Horizontal or Vertical					
140TC	All	206	30BC02JPP3	205	25BC02JPP3
180TC	All	207	35BC02JPP3	205	25BC02JPP3
210TC	DP	209*	45BC02JPP3*	205	25BC02JPP3
210TC	Encl.	209*	45BC02JPP3*	206	30BC02JPP3
250TC	All	309	45BC03JPP3	207	35BC02JPP3
280TC	All	311	55BC03JPP3	209	45BC02JPP3
320TC	All	312	60BC03JPP3	311	55BC03JPP3
360TC	All	314	70BC03JPP3	311	55BC03JPP3
400TC	All	314	70BC03JPP3	312	60BC03JPP3
440TC	All	314	70BC03JPP3	313	65BC03JPP3
P-Base Normal Thrust Vertical Motors					
180HP	All	207	35BC02JPP3	205	25BC02JPP3
210HP	DP	209	45BC02JPP3	205	25BC02JPP3
210HP	Encl.	209	45BC02JPP3	206	30BC02JPP3
250HP	All	309	45BC03JPP3	207	35BC02JPP3
280HP	All	311	55BC03JPP3	209	45BC02JPP3
320HP	All	312	60BC03JPP3	311	55BC03JPP3
360HP	All	314	70BC03JPP3	311	55BC03JPP3
400HP	All	314	70BC03JPP3	312	60BC03JPP3
440HP	All	314	70BC03JPP3	313	65BC03JPP3

★ Cylindrical roller bearings. * Type S motor uses 309 rear bearing.

BEARING INFORMATION—CONTINUED

Frame	Enclosure	Drive bearing Mfgr's number	Drive bearing AFBMA number	Front bearing Mfgr's number	Front bearing AFBMA number
P-Base In-Line Process Pump Motors					
180LP	Encl.	5210	.....	206	30BC02JPP3
210LP	Encl.	5210	.....	206	30BC02JPP3
250LP	Encl.	5213	.....	207	35BC02JPP3
280LP	Encl.	5312	.....	209	45BC02JPP3
320LP	Encl.	5312	.....	311	55BC03JPP3
360LP	Encl.	5312	.....	311	55BC03JPP3
400LP	Encl.	5312	.....	312	60BC03JPP3
440LP	Encl.	7219✔	95BT02M✔	313	65BC03JPP3
P-Base High Thrust Vertical Motors (Standard Thrust Only)					
(TP or VP)					
210TP	All	7309	45BT03M	209	45BC02JPP3
250TP	All	7311	55BT03M	309	45BC03JPP3
280TP	All	7311	55BT03M	311	55BC03JPP3
320TP	All	7219	95BT02M	312	60BC03JPP3
360TP	All	7219	95BT02M	314	70BC03JPP3
400TP	All	7222	110BT02M	314	70BC03JPP3
440TP	All	7222✔	110BT02M✔	314	70BC03JPP3
Wound Rotor Motors					
210T	All	207	35BC02JPP3	206	30BC02JPP3
250T	All	309	45BC03JPP3	207	35BC02JPP3
280T	All	311	55BC03JPP3	209	45BC02JPP3
280TS	All	311	55BC03JPP3	209	45BC02JPP3
320T	All	312	60BC03JPP3	311	55BC03JPP3
320TS	All	311	55BC03JPP3	311	55BC03JPP3
360T	All	314	70BC03JPP3	311	55BC03JPP3
360TS	All	311	55BC03JPP3	311	55BC03JPP3
400T	DP & NV	317	85BC03JPP3	313	65BC03JPP3
400T	TEFC	317	85BC03JPP3	312	60BC03JPP3
400TS	DP & NV	312	60BC03JPP3	313	65BC03JPP3
400T	TEFC	312	60BC03JPP3	312	60BC03JPP3
444T	All	319	95BC03JPX3	314	70BC03JPP3
444TS	All	313	65BC03JPP3	314	70BC03JPP3
445T	All	319★	95RN03X3★	314	70BC03JPP3
445TS	All	313	65BC03JPP3	314	70BC03JPP3
447-9T	All	319★	95RN03X3★	314	70BC03JPP3
447-9TS	All	313	65BC03JPP3	314	70BC03JPP3

★ Cylindrical roller bearings. ✔ Two bearings required. Set consists of three bearings.

EASA Technical Manual © 1996-2012, Electrical Apparatus Service Association, Inc.

BEARING INFORMATION—CONTINUED

BEARINGS FOR LIFE-LINE® MOTORS

The bearings shown below are for use on open, fan-cooled, splash-proof and totally-enclosed–A, CAP, CSP, CIP and CWP motors and open and dripproof SK motors.

Frame	Bearing location	Max. rpm	Type of service ★ (Belted or coupled)	Type A Bearing	Types CAP*, CSP Bearing	Types CIP, CWP Bearing	Type SK Bearing
182	Front and rear	3600	Both	205 DRW	.....	.....	.....
184	Front and rear	3600	Both	205 DRW	.....	.....	.....
203	Front and rear	3600	Both	.....	205 DRW	205 DRW	205 DRW
204	Front and rear	3600	Both	.....	205 DRW	205 DRW	205 DRW
213	Front and rear	3600	Both	206 DRW	.....	.....	.....
215	Front and rear	3600	Both	206 DRW	.....	.....	.....
224	Front and rear	3600	Both	.....	206 DRW	206 DRW	206 DRW
225	Front and rear	3600	Both	.....	206 DRW	206 DRW	206 DRW
254U	Front and rear	3600	Both	208 DRW	.....	.....	.....
256U	Front and rear	3600	Both	208 DRW	.....	.....	.....
254	Front	3600	Both	.....	207 DRW	207 DRW	206 DRW
	Rear	3600	Both	.....	207 DRW	207 DRW	207 DRW
284	Front	3600	Both	.....	207 DRW	207 DRW	206 DRW
	Rear	3600	Both	.....	207 DRW	207 DRW	207 DRW
284U	Front and rear	3600	Both	309 DRW	.....	.....	.....
286U	Front and rear	3600	Both	309 DRW	.....	.....	.....
324	Front	3600	Both	.....	209 DRW	209 DRW	207 DRW
	Rear	3600	Both	.....	209 DRW	209 DRW	209 DRW
326	Front	3600	Both	.....	209 DRW	209 DRW	207 DRW
	Rear	3600	Both	.....	209 DRW	209 DRW	209 DRW
324U	Front and rear	3600	Both	311 DRW	.....	.....	.....
326U	Front and rear	3600	Both	311 DRW	.....	.....	.....
364	Front	3600	Both	.....	311 DRW	309 DRW	209 DRW
	Rear	3600	Both	.....	311 DRW	311 DRW	311 DRW
365	Front	3600	Both	.....	311 DRW	309 DRW	209 DRW
	Rear	3600	Both	.....	311 DRW	311 DRW	311 DRW
404	Front	3600	Both	.....	312 DRW	310 DRW	.....
	Rear	3600	Both	.....	312 DRW	312 DRW	.....
405	Front	3600	Both	.....	312 DRW	310 DRW	.....
	Rear	3600	Both	.....	312 DRW	312 DRW	.....
444	Front and rear	3600	Belted	.....	314 DRW	314 DRW	.....
444S	Front and rear	3600	Coupled	.....	312 DRW	312 DRW	.....
445	Front and rear	3600	Belted	.....	314 DRW	314 DRW	.....
445S	Front and rear	3600	Coupled	.....	312 DRW	312 DRW	.....
504S	Front and rear	3600	Coupled	.....	312 DRW	.....	.....
504U	Front	2500	Belted	.....	315	.....	.....
504U	Rear	2500	Belted	.....	5315	.....	.....
505	Front	2500	Belted	.....	315	.....	.....
	Rear	2500	Belted	.....	5315	.....	.....
505S	Front and rear	3600	Coupled	.....	312 DRW	.....	.....
580C	Front	2500	Belted	.....	318	.....	.....
	Rear	2500	Belted	.....	5222	.....	.....
580H	Front and rear	3600	Coupled	.....	314	.....	.....
580S	Front and rear	1800	Coupled	.....	318	.....	.....
680C	Front	2500	Belted	.....	318	.....	.....
	Rear	2500	Belted	.....	5222	.....	.....
680D	Front	2500	Belted	.....	318	.....	.....
	Rear	2500	Belted	.....	22222	.....	.....
680H	Front and rear	3600	Coupled	.....	316	.....	.....
680S	Front and rear	1800	Coupled	.....	318	.....	.....

* Tabulation applies to CAP motors up to frame size 324.
★ Does not apply to type SK motors.
DRW–cartridge or prelubricated type (double row width)

BEARING INFORMATION—CONTINUED

STANDARD (NOT LIFE-LINE) OPEN, FAN-COOLED, SPLASH-PROOF AND TOTALLY-ENCLOSED CS, CSP, CW AND SK MOTORS

The bearings shown are not recommended for speeds over 2500 rpm on types CS and CW motors of frame size 504 or larger.

Frame	Bearing location	Type CS bearing	Type CW bearing
204	front and rear	305 WIR	305 WIR
224 and 225	front and rear	306 WIR	306 WIR
254	front and rear	306 WIR	306 WIR
284	front	307 WIR	306 WIR
	Rear	307 WIR	307 WIR
324 and 326	front	309 WIR	307 WIR
	Rear	309 WIR	309 WIR
364 and 365	front	310 WIR	309 WIR
	Rear	310 WIR	310 WIR
404 and 405	front	311 WIR	310 WIR
	Rear	311 WIR	311 WIR
444 and 445	front	313 WIR	311 WIR
	Rear	313 WIR	313 WIR
504 505	front	315 WIR	313 WIR
and 607	Rear	5315	5315
609	front	315 WIR	313 WIR
	Rear	315 WIR	5315
750-C to 790-C	front	318 WIR	315 WIR
	Rear	5318	5318
850-C to 890-C	front	320 WIR	318 WIR
	Rear	5320	5320
8120-C	front	320 WIR	.....
	Rear	5320	.....

Frame	Bearing location	Type CSP bearing	Type SK bearing
203 and 204	Front and rear	205 DRW	305 WIR
224 and 225	Front and rear	206 DRW	306 WIR
254	Front and rear	.....	306 WIR
284	Front	.....	306 WIR
	Rear	.....	307 WIR
23	Front and rear	.....	307 WIR
33	Front	.....	307 WIR
	Rear	.....	310 WIR
43 and 53	Front	.....	307 WIR
	Rear	.....	310 WIR
63	Front	.....	307 WIR
	Rear	.....	310 WIR
83	Front	.....	310 WIR
	Rear	.....	311 WIR
93	Front	.....	310 WIR
	Rear	.....	311 WIR
103	Front	.....	310 WIR
	Rear	.....	313 WIR
113	Front	.....	310 WIR
	Rear	.....	313 WIR
123 and 123-L	Front	.....	310 WIR
	Rear	.....	313 WIR
133	Front	.....	313 WIR
	Rear	.....	5315
143 143-L	Front	.....	313 WIR
153 and 153-L	Rear	.....	5315
163 163-L and	Front	.....	315 WIR
173	Rear	.....	5318
183 and 184-A	Front	.....	5318
	Rear	.....	5320

EASA Technical Manual © 1996-2012, Electrical Apparatus Service Association, Inc.

WINPOWER, INC.

BEARING INFORMATION

Frame	Drive end bearing Fafnir number	Ring end bearing Fafnir number
8”	204NPP	204NPP
10”*	205PD	205PD
10”	W206PP	206PP
13”*	Coupling Support	309PP
14”	W207PP	206PP
20”*	Coupling Support	S-3612

* Revolving field.
Generators not marked by asterisk are revolving armature machines.

1.3 REFERENCED STANDARDS

The following standards are referenced in this section of the *EASA Technical Manual*.

ANSI/ABMA Std. 7-1995 (R2001): *Shaft and Housing Fits for Metric Radial Ball and Roller Bearings (Except Tapered Roller Bearings) Conforming to Basic Boundary Plan*. American Bearing Manufacturers Association, Inc. and American National Standards Institute. New York, NY, 2001.

ANSI/ABMA Std. 20-2011: *Radial Bearings of Ball, Cylindrical Roller and Spherical Roller Types–Metric Design*. American Bearing Manufacturers Association, Inc. and American National Standards Institute. New York, NY, 2011.

IEC Std. 60034-5-2006: *Rotating Electrical Machines, Part 5: Degrees of Protection Provided b y the Integral Design of Rotating Electrical Machines (IP Code) - Classification*. International Electrotechnical Commission. Geneva, Switzerland, 20006.

IEEE Std. 841-2009: *Severe Duty Totally Enclosed Fan-Cooled (TEFC) Squirrel Cage Induction Motors–Up to and Including 370 kW (500 hp)*. Institute of Electrical and Electronics Engineers, Inc. New York, NY, 2009.

NEMA Stds. MG 1-2009, Rev. 1-2010: *Motors and Generators*. National Electrical Manufacturers Association. Rosslyn, VA, 2010.

EASA Technical Manual © 1996-2012, Electrical Apparatus Service Association, Inc.