8

Bearings

Section Outline Page

8.1 ROLLING ELEMENT BEARINGS FOR ROTATING ELECTRICAL MACHINES

By E. Steve Darby (deceased)
Darby Electric Co., Inc.
Anderson, SC

Ball and roller bearings (rolling bearings) are manufactured to very rigid tolerance specifications and must be treated as precision parts to insure that they do not fail prematurely. ANSI/ABMA Std. 20 specifies boundary dimensions, tolerance classes, and internal clearance for ball and roller bearings. ISO bearing standards are produced by Technical Committee 4 (TC4) and subcommittees (SC) 4, 5, 6, 7, 8, 9 and 11. Much of the information regarding dimensions, tolerances and clearances is contained in ISO 15, ISO 104 and ISO 113.

BOUNDARY DIMENSIONS

The ID, OD and width of bearings are standardized metric dimensions with the last two digits in the bearings nomenclature representing the bore size. Beginning with a 20 mm bore, the last two digits equal the bore in mm divided by 5. The smallest internal diameter interval is, therefore, 5 mm. This permits the two-digit value to span a bore range from 20 mm (04) to 480 mm (96). This system is used on all types of rolling element bearings.

TOLERANCE CLASSES

The tolerance classes specified in the ABMA standards have been established by the Annular Bearing Engineers Committee (ABEC) of the American Bearing Manufacturers Association (ABMA). These tolerance classes have been accepted by the American National Standards Institute (ANSI) and conform essentially with standards of the International Organization for Standardization (ISO).

ABEC PARAMETERS

ABEC standards, which define tolerances for several major bearing dimensions and characteristics, are divided into mounting dimensions and bearing geometry. The geometric tolerances apply to both inner and outer rings and include:

- Bore roundness
- Bore runout with side
- Bore taper
- Race runout with side
- Width variation
- Radial runout

ABEC standards do not address many other factors that affect bearing performance and life, including:

- Materials
- Ball complement–number, size and precision
- Raceway curvature, roundness and finish
- Cage design
- Lubricant

ABEC PRECISION CLASSES

General-purpose ball bearings are manufactured to tolerances in accordance with precision classes ABEC 1, ABEC 3, ABEC 5, ABEC 7 and ABEC 9. The ascending numbers indicate stricter tolerances and additional requirements as found in ANSI/ABMA Std. 20.

ELECTRIC MOTOR CLASS

The American bearing industry also recognizes an Electric Motor Class of bearings that comply with additional noise and vibration standards that may be desirable to the end user. Specifications for this bearing class include:

- Pressed steel cage
- C3 fit
- ExxonMobil Polyrex grease
- Passes the bearing manufacturer's vibration and noise standard

Besides these benefits, specifying Electric Motor Class wording in purchasing documents could also help deter counterfeit or "grey market" bearings from being inadvertently supplied.

BEARING MANUFACTURER NUMBERING SYSTEMS

The metric system of measurement has been widely adopted by all bearing manufacturers, which ensures ready interchangeability of most bearing types and sizes.

Bearings can be identified by using ABMA numbers or by using each manufacturer's discrete numbering system. In either case, it is imperative that EASA repair firms record the name as well as all of the numbers on each bearing that is to be replaced. They should also check the nomenclature designations in catalogs from the makers of the bearings because there are some variations among manufacturers.

INTERNAL CLEARANCE

The internal clearance of bearings is the space provided between the elements for a lubricant film and thermal expansion during normal operation to prevent preloading of the bearing that could cause premature failure. The internal clearance is specified as C0, C2, C3 and C4. This is a basic boundary dimension, with C2 being a tight clearance while C3 and C4 are loose clearances. The correct space between the elements can be critical to the application.

For electric motors, the vast majority of designs use a C3 internal clearance as "standard". There are some applications, such as shaker screen/vibrator motors which require a C4 internal clearance due to the heavy radial load resulting from the counterweights. Additionally, a few manufacturers use C4 bearings on the drive end in close-coupled compressor applications. In this case, the greater internal clearance of the C4 bearing accommodates the higher operating temperature.

SHAFT AND HOUSING FIT

Shaft and housing fits for metric radial ball and roller bearings conforming to basic boundary plans have been es-

FIGURE 8-1

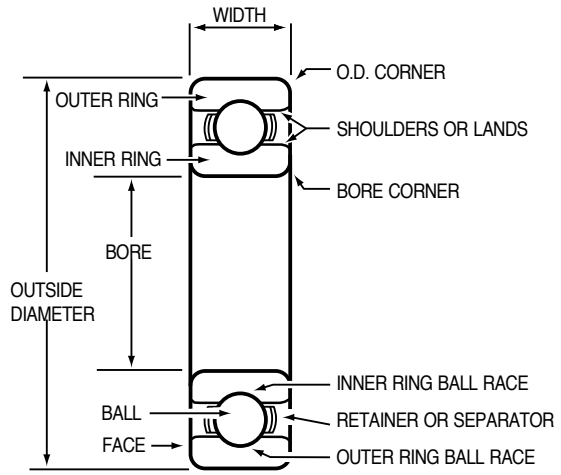

Ball bearing nomenclature.

tablished by ANSI/ABMA Std. 7.* Shaft and housing fits (j5, k5 and H6) are listed in the "Bearing Fit Tolerance" charts beginning on Page 8-15.

A careful study of the ABMA Stds. 7 and 20 should be made by anyone responsible for replacing bearings in electric motors.

BEARING FITS

The inner ring, which is normally the rotating member in electric motors, should be prevented from slipping on the shaft since the hard bearing will wear the relatively soft shaft. This requires an interference fit of .0003 to .0006 inch per inch diameter. An excessive interference fit will preload the bearing, causing early failure; a slip fit will let the inner race of the bearing slide around the shaft, causing early failure.

The outer ring is normally the stationary member in electric motors. Since it must be free to slide axially to compensate for thermal expansion of the shaft, it must not be an interference fit and should never be locked into position with a locking compound. The outer ring may occasionally rotate a small amount, but this is good since it moves a new section into the overhung load area.

Bearing selection is important but must be complemented by correct fit and proper installation to maintain the precision required for long bearing life.

FIGURE 8-2

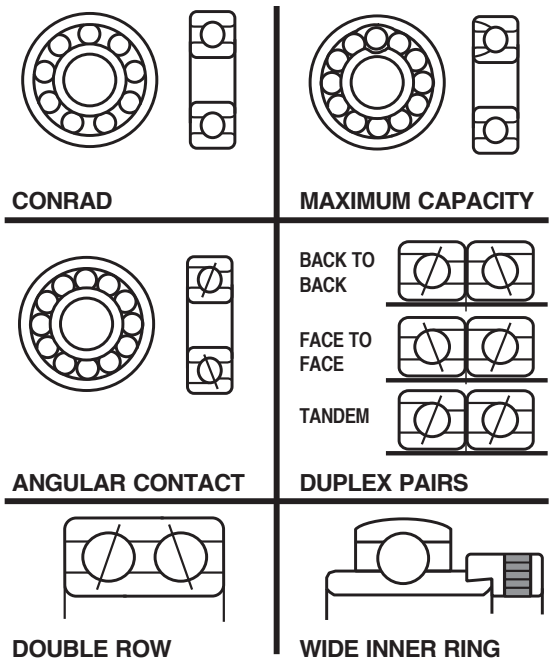

Basic ball bearing types.

L_{10} BEARING LIFE

A rolling bearing reaches its normal end of life when there is metal fatigue on either balls or the inner race of the bearing. Fatigue is totally dependent on the operating load, lubrication, temperature and rotational speed. The L_{10} life is the number in hours that 10% of a sample of identical bearings in identical conditions would fail. The sample must be large enough to provide a theoretical statistical norm.

The L_{10} life for a bearing operating in a belted application may be as little as one or two years (8,700 - 17,520 hours) while the same bearing operating in a direct-coupled application may be as much as ten or eleven years (87,000 - 93,360 hours). The L_{10} life of a bearing does not vary; the operating conditions vary and shorten the theoretical life.

TABLE 8-1: TEMPERATURE DIFFERENCE LIMITS FOR MOUNTING BEARINGS*

Nominal bore (mm)		Shaft tolerance class							
Over	Inclusive	k5 or k6		m5 or m6		n5 or n6		p5 or p6	
18	30	235°F	113°C	—	—	—	—	—	—
30	50	195°F	90°C	210°F	109°C	—	—	—	—
50	80	160°F	71°C	185°F	85°C	210°F	109°C	—	—
80	120	140°F	60°C	160°F	71°C	175°F	80°C	195°F	90°C
120	180	130°F	55°C	140°F	60°C	150°F	65°C	170°F	75°C
180	250	120°F	49°C	130°F	55°C	140°F	60°C	150°F	65°C
250	315	115°F	46°C	120°F	49°C	130°F	55°C	140°F	60°C

* Temperature difference between shaft and bearing.
Note: Bearing temperature should never exceed 250°F (125°C). Consider freezing the shaft if the temperature differential would require heating the bearing above 250°F (125°C).

FIGURE 8-3: SHIELDED BEARING

SHIELD

Non-contact, low-friction, metal shield for protection against foreign substances

FIGURE 8-4: SEALED BEARINGS

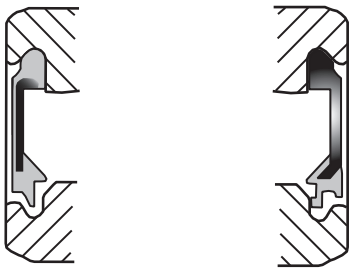

NON-CONTACT SEAL CONTACT SEAL

Non-contact, low-friction, rubber and metal seal develops a labyrinth effect for protection against foreign substances.

Contact type rubber and metal seal with friction seal and labyrinth effect for maximum protection from dust penetration.

INSTALLATION

Bearings with bores of 45 mm or smaller (e.g., 309) should be pressed onto the shaft not heated due to possibility of internal damage to the bearing. **Caution:** Installing a bearing on a shaft by pressing the outer race can damage the bearing; press only on the inner race.

The best method of installing larger bearings is to heat them to expand the inner race so it can be snapped onto the shaft and held firmly against the shaft shoulder until it locks in place. Open bearings should never be heated above 250°F (120°C), and normally they can be installed after being heated to 175°F (80°C). A pre-lubricated, shielded or sealed bearing should never be heated above 175°F (80°C). (See Table 8-1 for temperature limits for mounting bearings.) Proper installation also requires careful inspection of the shaft to ensure that the bearing is the correct size and that there are no nicks or dents in the shaft or shoulder.

If using an induction bearing heater, and if demagnetizing is required, it can be done by passing the bearing between the two poles of the induction heater.

BEARING STORAGE

Bearings should be stored flat on a cushioned surface and should be used before the expiration date (Figure 8-5). In addition, bearings should be stored in an area that is temperature and humidity controlled.

FIGURE 8-5: BEARING STORAGE

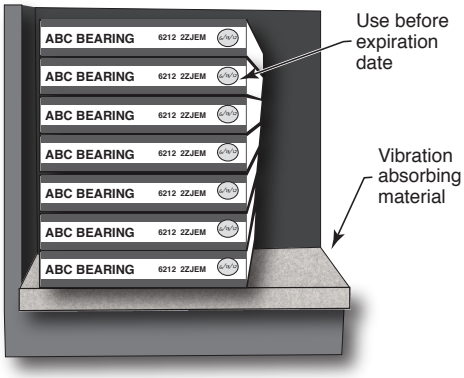

Store bearings flat on vibration absorbing material and use before expiration date.

TABLE 8-2: SELECTION GUIDE FOR SEALED AND SHIELDED BEARINGS

Selection criteria	Shield/seal type		
	Shield	Non-contact seal	Contact seal
Torque	Low	Low	Higher (because of contact lip mechanism)
High-speed characteristics	Same as open bearings	Same as open bearings	Limited due to contact seal mechanism
Grease retention	Good	Better than shield	Slightly better than non-contact type
Dust prevention	Good	Better	Excellent
Waterproofing	Unsuitable	Unsuitable	Good (usable under water spray)
Heat resistivity	Depending on the heat resistance of the grease	Intermittent: 266°F (130°C) Continuous: 248°F (120°C)	Intermittent: 248°F (120°C) Continuous: 212°F (100°C)
Operating temperature	140°F (60°C)	140°F (60°C)	190°F (88°C) at start, then drops to 170°F (77°C)

8.2 ABMA NOMENCLATURE

ABMA NOMENCLATURE—BALL BEARINGS

Bearing Bore D D D — Bearing bore in millimeters (2 or 3 digits)

Bearing Type L L L — Type of ball bearing (2 or 3 letters)

BC – Standard deep groove ball bearing; e.g., 206-S (MRC) 6308 (SKF)
BL – Maximum capacity ball bearing with filling slot; e.g., 222-M (MRC), 222-W (FAFNIR)
BH – Maximum capacity ball bearing double assembly; e.g., 222-R (MRC)
BT – Angular contact thrust bearing; e.g., 7313P (MRC)

Dimension Series D D — Dimension series

10 – Extra light; e.g., 100-KS (MRC) or 6000 (SKF)
02 – Light; e.g., 200-S (MRC) or 6200 (SKF)
03 – Medium; e.g., 300-S (MRC) or 6300 (SKF)
32 – Light series wide cartridge type sealed bearings; e.g., 200-SFFC (MRC)
33 – Medium series wide cartridge type sealed bearings; e.g., 300-SFFC (MRC)

Modifications L LL* L* — Type of cage or ball retainer

L — Column 2 or 3 used for R, T, or U

J – Standard – steel, sheet, or strip form, centered by the balls
K – Bronze or brass, not sheet or strip, centered by one race
M – Bronze or brass, not sheet or strip, centered by the balls
D – Non-metallic (phenolic), centered by one race
X – Any type of cage
Y – Non-ferrous metal, sheet or strip form, centered by the balls

LL* — Column 2 or 3 used for R, T, or U

P – Single shielded – permanently fastened
PP – Double shielded – permanently fastened
E – Single sealed – permanently fastened
EE – Double sealed – permanently fastened
KK – Double labyrinth seals for cartridge bearings
R – Pair of bearings modified for duplex mounting – back to back (DB)
T – Pair of bearings modified for duplex mounting – in tandem (DT)
U – Pair of bearings modified for duplex mounting – face to face (DF)
X – None of the above – see footnote *
XX – None of the above– see footnote *

L* —

G – Snap ring and groove in outer race
D – Single bearing modified for duplex mounting (DB, DF, or DT)

Fitup & Tolerance D** D** — Internal clearance

D** — Internal clearance

0 – Standard fitup – ABMA 0 or C/0
3 – Loose internal fitup – ABMA 3 or C/3
4 – Looser than C/3 – ABMA 4 or C/4

D** — Tolerance

0 – Standard tolerance – ABEC 1
3 – More precision than 0 – ABEC 3
5 – More precision than 3 – ABEC 5

Lubricant L** —

R – Low temperature silicone grease 100°F
H – High temperature grease 275°F
S – High temperature silicon grease 300°F

L designates a letter
D designates a digit

E.g., 203 = 17, 204 = 20, 307 = 35, 222 = 110; i.e., the last two digits are multiplied by 5 to obtain the bore, excepting the 203 or 303 size bearing, which is 17.

Example: 35BC02JPP0 – Standard deep groove, light series, standard steel cage, double shielded, standard fitup and standard tolerances MRC 207-SFF or equivalent

Example: 110BT03MT03 – This is a pair of 7322DT angular contact bearings mounted in tandem, standard fitup and ABEC3 tolerances.

* The letters for Columns 2, 3, and 4 of modifications are omitted if none are applicable. If column 4 is applicable but not 3, or 2 and 3, and X or XX is used on Column 3, or 2 and 3; e.g., 35 BC02J03 or 35BT03MXXD03.

** If these three columns are omitted, standard fitup, tolerances, and greases are applied.

ABMA stands for American Bearing Manufacturers Association, formerly known as the Anti-Friction Bearing Manufacturers Association (AFBMA).

ABMA NOMENCLATURE—ROLLER BEARINGS

L designates a letter
D designates a digit

Bearing Bore D D D

Bearing bore in millimeters (2 or 3 digits)

E.g., N 208 = 40, 22222 = 110; i.e., the last two digits are multiplied by 5 to obtain the bore.

Bearing Type L L L

Type of roller bearing (2 or 3 letters)

- RN – Cylindrical roller bearing, shoulders on inner ring
- RU – Cylindrical roller bearing, shoulders on outer ring
- RJ – Cylindrical roller bearing, shoulders on each side of outer ring and one side of inner ring
- SC – Double row self-aligning roller bearing
- SD – Double row self-aligning roller bearing
- TS – Spherical roller thrust bearing; e.g., SKF 29430

Dimension Series D D

Dimension series

- 02 Light series; e.g., N208 (SKF)
- 03 Medium series; e.g., N308 (SKF)
- 22 Series used for self-aligning spherical roller bearings; e.g., 22222 (SKF)
- 23 Series used for self-aligning spherical roller bearings; e.g., 22322 (SKF)
- 94 Series used for spherical roller thrust bearings; e.g., 29430

Modifications L L

Type of cage or roller retainer

- X – Any type of cage
- K – Brass or bronze, not in sheet or strip form, ring centered
- M – Brass or bronze, not in sheet or strip form, centered by rolling element
- H – Light metal, not in sheet or strip form, ring centered

NOT APPLICABLE – THIS COLUMN OMITTED

Fitup & Tolerance D D

Internal clearance

- 0 – Normal internal clearance
- 2 – Internal clearance less than normal
- 3 – Internal clearance greater than normal

Tolerance

- 0 – Standard tolerance – RBEC 1
- 3 – More precision than 0 – RBEC 3
- 5 – More precision than 3 – RBEC 5

ABMA stands for American Bearing Manufacturers Association, formerly known as the Anti-Friction Bearing Manufacturers Association (AFBMA).

8.3 BEARING MANUFACTURERS' NOMENCLATURE FOR BALL BEARINGS

BEARING MANUFACTURERS' NOMENCLATURE
RADIAL BALL BEARINGS—TYPES AND SERIES

	Bearing Series	SINGLE ROW DEEP GROOVE BALL BEARINGS–CONRAD TYPE									
		FAFNIR	FAG	GMN	KOYO	MRC	NACHI	NSK	NTN	SKF	STEYR
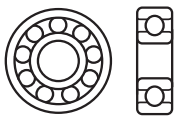	Light	200K	6200	6200	6200	200-S	6200	6200	6200	6200	6200
	Medium	300K	6300	6300	6300	300-S	6300	6300	6300	6300	6300
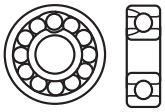	Bearing Series	SINGLE ROW DEEP GROOVE BALL BEARINGS–MAXIMUM CAPACITY									
	Light	200W	—	—	—	200-M	—	BL200	BL200	200	—
	Medium	300W	—	—	—	300-M	—	BL300	BL300	300	—
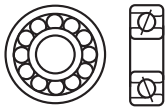	Bearing Series	SINGLE ROW ANGULAR CONTACT BEARINGS									
	Light	7200	—	—	—	7200	7200	7200	7200	7200	7200
	Medium	7300	—	—	—	7300	7300	7300	7300	7300	7300
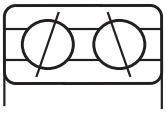	Bearing Series	DOUBLE ROW ANGULAR CONTACT BEARINGS									
	Light	5200	—	—	—	5200	5200	5200	5200	5200	3200
	Medium	5300	—	—	—	5300	5300	5300	5300	5300	3300

BEARING MANUFACTURERS' NOMENCLATURE
SEALS AND SHIELDS FOR BALL BEARINGS

	FAFNIR		FAG		GMN		KOYO		MRC	
	One side	Both sides	One side	Both sides	One side	Both sides	One side	Both sides	One side	Both sides
Seal	P	PP	RSR	.2RSR					Z	ZZ
Contact seal					RS	2RS	RS	2RS		
Contact seal double lip					URS	2URS	RK	2RK		
Low friction seal					RZ	2RZ	RD	2RD		
Non-contact seal					BRS	2BRS	RU	2RU		
Polyacrylic seal										
Fluorocarbon seal										
Mechanical seal	L	LL								
Felt seal	T									
Shield	D	DD	ZR	.2RZ	Z	2Z	Z	ZZ	F	FF
Stainless steel shield										
Rubber-coated shield									FP	FFP
Removable shield										

	NACHI		NSK		NTN		SKF		STEYER	
	One side	Both sides	One side	Both sides	One side	Both sides	One side	Both sides	One side	Both sides
Seal							RSI	2RSI	RS	2RS
Contact seal	NSL	2NSL	DU	DDU						
Contact seal double lip					LU	LLU				
Low friction seal					LH	LLH				
Non-contact seal	NK	2NK	V	VV	LB	LLB				
Polyacrylic seal					LUA	LLUA				
Fluorocarbon seal					LUAI	LLUAI				
Mechanical seal										
Felt seal										
Shield	Z	ZZ	Z	ZZ	Z	ZZ	Z	2Z	Z	2Z
Stainless steel shield					ZI	ZZI				
Rubber-coated shield										
Removable shield					ZA	ZZA				

FAFNIR NUMBERING SYSTEM

Radial Bearings

Prefixes

A	stainless steel
B	torque tube type
F	flanged outer ring
H	snug fit
J	extra loose internal fit
L	internal self-aligning
M	precision ABEC-3
2M	angular-contact, ABEC-3, 15°
3M	angular-contact, ABEC-3, 25°
MM	super-precision, ABEC-7 tolerances
MV	ABEC-7 modified
2MM	angular-contact, ABEC-7, 15°
3MM	angular-contact, ABEC-7, 25°
P	loose fit
S	extra-small, inch-dimension type (Aerolite)
T	tight fit
V	precision ABEC-5
W	wide-type single row (same width inner and outer)
WIR	single row – wide inner only

Bore size (04 and up: multiply last two numbers by 5 to get bore in millimeters)

00	10 mm
01	12 mm
02	15 mm
03	17 mm
04	20 mm
05	25 mm
12	60 mm
20	100 mm

Suffixes

A	old maximum capacity designation
C1	C2, C3, etc. (manufacturing code — Fafnir use only)
FT	full ball complement
H	old Conrad design
K	Conrad, non-filling slot type
W	maximum capacity, filling slot type
WI	angular-contact, low shoulder, outer
WO	angular-contact, low shoulder, inner
WN	angular-contact, low shoulder, inner and outer

A 2 05 K DD

Numbers: basic type series

S1,	3, 5, 7, etc., single row extra-small, inch dimension
30	single row metric, extra-small
100	single row, extra large
200	single row, light
300	single row, medium
5200	double row, light
5300	double row, medium
7200	single row, angular-contact, light
7300	single row, angular-contact, medium
7400	single row, angular-contact, heavy
9100	single row, extra-light
9300	single row, ultra-light
XLS	extra-large, inch-dimension

Additional features

B	spherical outside diameter
BR	cast bronze retainer
CR	composition retainer
D	one shield
DD	two shields
G	Wireloc (snap ring)
L	one Mechani-Seal
LL	two Mechani-Seals
MBR	machined bronze retainer
P	one seal
PP	two seals
PP2,	3,4 etc.; Tri-Ply Seals if prefix letter is W (example, W208PPB5)
S	external self-aligning
SMBR	iron silicon bronze retainer
T	one felt seal

Note: Inclusion of this chart is not an endorsement or recommendation of any manufacturer.

NSK NUMBERING SYSTEM

Ball bearings

BASIC TYPE & SERIES

R	Inch, single row
600	Metric, single row, extra small
6000	Metric, single row, extra light
6200	Metric, single row, light
6300	Metric, single row, medium
63200	Metric, cartridge, light
63300	Metric, cartridge, medium
5200	Metric, double row, conrad, light
5300	Metric, double row, conrad, medium
3200	Metric, double row, maximum compliment, light
3300	Metric, double row, maximum compliment, medium
BL200	Metric, maximum capacity, light
BL300	Metric, maximum capacity, medium

INTERNAL CLEARANCE

C2	Tight
C	Standard *
C3	Loose
C4	Extra Loose

* No symbol also indicates standard clearance

NOISE LEVEL

E Electric motor Grade

62 05 ZZ C3 E SRI S

BORE SIZE

(04 and up: multiply last two numbers by 5 to get bore in millimeters)

00	10 mm	04	20 mm
01	12 mm	05	25 mm
02	15 mm	12	60 mm
03	17 mm	20	100 mm

SEALS & SHIELDS

V	Single non-contact seal
VV	Double non-contanct seal
Z	Single shield
ZZ	Double shield
D	Single contact seal (R and 600 series)
DD	Double contact seal (R and 600 series)
DU	Single contact seal
DDU	Double contact seal

GREASE TYPE

AKC
AV2
B32
SRI

GREASE FILL

S	Standard
L	Light
H	Heavy

Note: Inclusion of this chart is not an endorsement or recommendation of any manufacturer.

NTN NUMBERING SYSTEM

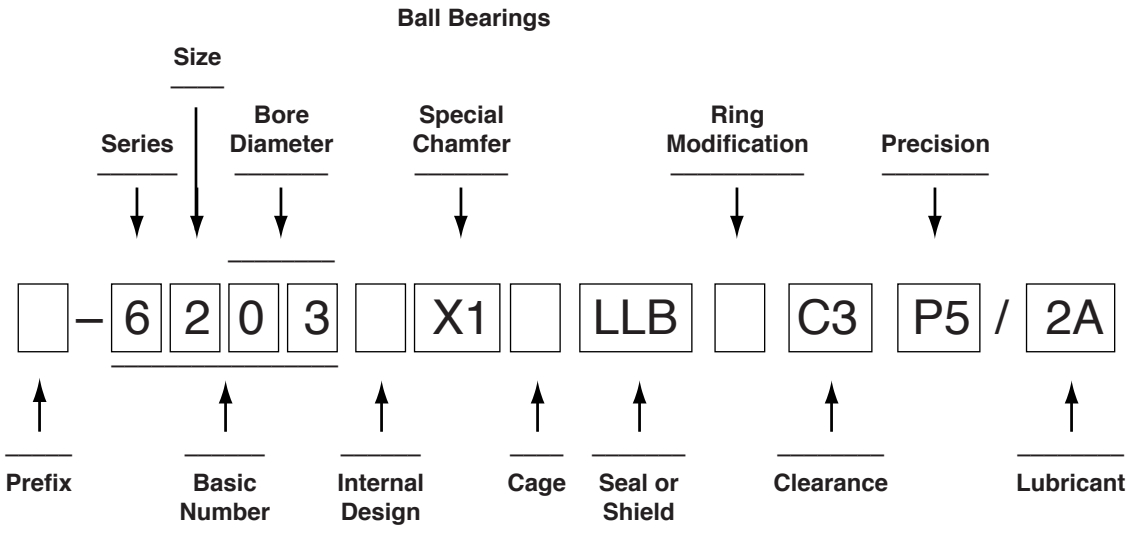

1. PREFIX

TS2	Heat stabilization for up to 320°F (160°C)
TS3	Heat stabilization for up to 390°F (200°C)
TS4	Heat stabilization for up to 480°F (250°C)

2. SERIES

6	Single row deep groove ball bearings
8, WC8	Single row deep groove ball bearings
BL	Maximum capacity
DE & DF	Special double row ball bearings
SC & SX	Special single row ball bearings
R	Inch series

3. INTERNAL DESIGN

A	Internal redesign, from A onward
U	Universal seal groove for open bearings

4. CHAMFER

Xn	Special chamfer, from 1 onward (X1, X2…)

5. CAGE

No Symbol	Pressed steel cage
J	Pressed steel cage
T1	Phenolic cage
T2	Nylon cage

6. SEAL OR SHIELD

No Symbol	Open type
LB, LLB	Non-contact rubber seal
LU, LLU	Double-lip contact rubber seal
LH, LLH	Light contact rubber seal
LUA, LLUA	Polyacrylic rubber seal
LUA1, LLUA1	Fluorocarbon rubber seal
Z, ZZ	Shield
Z1, ZZ1	Stainless steel shield
ZA, ZZA	Removable shield

7. RING MODIFICATION

N	Snap ring groove on outer ring, but without snap ring
NR	Snap ring groove on outer ring, snap ring included
/X.XX	Special bore, XX.XX in mm; e.g., 5/16” bore, /7.938
/XX.X	Special O.D., size XX.X in mm.

8. INTERNAL CLEARANCE

C1	Radial clearance less than C2
C2	Radial clearance less than normal
C3	Radial clearance greater than normal
C4	Radial clearance greater than C3
C5	Radial clearance greater than C4
CSXX	Special radial clearance; XX is mean value in 0.001 mm units

9. TOLERANCE

P6	ISO class 6 (equivalent to ABEC 3)
P5	ISO class 5 (equivalent to ABEC 5)
P4	ISO class 4 (equivalent to ABEC 7)
PXn	Special tolerance, from 1 onward (PX1, PX2…)
Vn	Special requirement, from 1 onward (V1, V2…)

10. PRELUBRICANT (Typical)

/1E	Exxon Andok C grease
/1W	Anderson Oil Winsor Lube L-245X, MIL-L-6085A
/2A	Shell Alvania #2 grease, MIL-G-18709A
/2E	Exxon Unirex N3
/3A	Shell Oil Alvania #3 grease
/3E	Exxon Beacon 325 grease
/5C	Chevron SRI #2 grease, MIL-G-3545C
/5S	Shell Aeroshell #7 grease, MIL-G-23827A
/9B	Mobil 28, MIL-G-81322
/L014	Shell Dolium R

Note: Inclusion of this chart is not an endorsement or recommendation of any manufacturer.

8.4 BEARING DIMENSIONS

NOMINAL DIMENSIONS FOR RADIAL BALL BEARINGS

BASIC NUMBER	200 SERIES							300 SERIES						
	ABMA BEARING NUMBER	BORE		OD		WIDTH		ABMA BEARING NUMBER	BORE		OD		WIDTH	
		mm	inches	mm	inches	mm	inches		mm	inches	mm	inches	mm	inches
00	10BC02	10	0.3937	30	1.1811	9	0.3543	10BC03	10	0.3937	35	1.3780	11	0.4331
01	12BC02	12	0.4724	32	1.2598	10	0.3937	12BC03	12	0.4724	37	1.4567	12	0.4724
02	15BC02	15	0.5906	35	1.3780	11	0.4331	15BC03	15	0.5906	42	1.6535	13	0.5118
03	17BC02	17	0.6693	40	1.5748	12	0.4724	17BC03	17	0.6693	47	1.8504	14	0.5512
04	20BC02	20	0.7874	47	1.8504	14	0.5512	20BC03	20	0.7874	52	2.0472	15	0.5906
05	25BC02	25	0.9843	52	2.0472	15	0.5906	25BC03	25	0.9843	62	2.4409	17	0.6693
06	30BC02	30	1.1811	62	2.4409	16	0.6299	30BC03	30	1.1811	72	2.8346	19	0.7480
07	35BC02	35	1.3780	72	2.8346	17	0.6693	35BC03	35	1.3780	80	3.1496	21	0.8268
08	40BC02	40	1.5748	80	3.1496	18	0.7087	40BC03	40	1.5748	90	3.5433	23	0.9055
09	45BC02	45	1.7717	85	3.3465	19	0.7480	45BC03	45	1.7717	100	3.9370	25	0.9843
10	50BC02	50	1.9685	90	3.5433	20	0.7874	50BC03	50	1.9685	110	4.3307	27	1.0630
11	55BC02	55	2.1654	100	3.9370	21	0.8268	55BC03	55	2.1654	120	4.7244	29	1.1417
12	60BC02	60	2.3622	110	4.3307	22	0.8661	60BC03	60	2.3622	130	5.1181	31	1.2205
13	65BC02	65	2.5591	120	4.7244	23	0.9055	65BC03	65	2.5591	140	5.5118	33	1.2992
14	70BC02	70	2.7559	125	4.9213	24	0.9449	70BC03	70	2.7559	150	5.9055	35	1.3780
15	75BC02	75	2.9528	130	5.1181	25	0.9843	75BC03	75	2.9528	160	6.2992	37	1.4567
16	80BC02	80	3.1496	140	5.5118	26	1.0236	80BC03	80	3.1496	170	6.6929	39	1.5354
17	85BC02	85	3.3465	150	5.9055	28	1.1024	85BC03	85	3.3465	180	7.0866	41	1.6142
18	90BC02	90	3.5433	160	6.2992	30	1.1811	90BC03	90	3.5433	190	7.4803	43	1.6929
19	95BC02	95	3.7402	170	6.6929	32	1.2598	95BC03	95	3.7402	200	7.8740	45	1.7717
20	100BC02	100	3.9370	180	7.0866	34	1.3386	100BC03	100	3.9370	215	8.4646	47	1.8504
21	105BC02	105	4.1339	190	7.4803	36	1.4173	105BC03	105	4.1339	225	8.8583	49	1.9291
22	110BC02	110	4.3307	200	7.8740	38	1.4961	110BC03	110	4.3307	240	9.4488	50	1.9685
24	120BC02	120	4.7244	215	8.4646	40	1.5748	120BC03	120	4.7244	260	10.2362	55	2.1654
26	130BC02	130	5.1181	230	9.0551	40	1.5748	130BC03	130	5.1181	280	11.0236	58	2.2835
28	140BC02	140	5.5118	250	9.8425	42	1.6535	140BC03	140	5.5118	300	11.8110	62	2.4409
30	150BC02	150	5.9055	270	10.6299	45	1.7717	150BC03	150	5.9055	320	12.5984	65	2.5591
32	160BC02	160	6.2992	290	11.4173	48	1.8898	160BC03	160	6.2992	340	13.3858	68	2.6772
34	170BC02	170	6.6929	310	12.2047	52	2.0472	170BC03	170	6.6929	360	14.1732	72	2.8346
36	180BC02	180	7.0866	320	12.5984	52	2.0472	180BC03	180	7.0866	380	14.9606	75	2.9528
38	190BC02	190	7.4803	340	13.3858	55	2.1654	190BC03	190	7.4803	400	15.7480	78	3.0709
40	200BC02	200	7.8740	360	14.1732	58	2.2835	200BC03	200	7.8740	420	16.5354	80	3.1496

Adapted from ABMA Std. 20, Table 1, Part 3.

NOMINAL DIMENSIONS FOR CYLINDRICAL ROLLER BEARINGS

Basic Number	200 Series							300 Series						
	ABMA Bearing Number	Bore		OD		Width		ABMA Bearing Number	Bore		OD		Width	
		mm	inches	mm	inches	mm	inches		mm	inches	mm	inches	mm	inches
00	10RU02	10	0.3937	30	1.1811	9	0.3543	10RU03	10	0.3937	35	1.3780	11	0.4331
01	12RU02	12	0.4724	32	1.2598	10	0.3937	12RU03	12	0.4724	37	1.4567	12	0.4724
02	15RU02	15	0.5906	35	1.3780	11	0.4331	15RU03	15	0.5906	42	1.6535	13	0.5118
03	17RU02	17	0.6693	40	1.5748	12	0.4724	17RU03	17	0.6693	47	1.8504	14	0.5512
04	20RU02	20	0.7874	47	1.8504	14	0.5512	20RU03	20	0.7874	52	2.0472	15	0.5906
05	25RU02	25	0.9843	52	2.0472	15	0.5906	25RU03	25	0.9843	62	2.4409	17	0.6693
06	30RU02	30	1.1811	62	2.4409	16	0.6299	30RU03	30	1.1811	72	2.8346	19	0.7480
07	35RU02	35	1.3780	72	2.8346	17	0.6693	35RU03	35	1.3780	80	3.1496	21	0.8268
08	40RU02	40	1.5748	80	3.1496	18	0.7087	40RU03	40	1.5748	90	3.5433	23	0.9055
09	45RU02	45	1.7717	85	3.3465	19	0.7480	45RU03	45	1.7717	100	3.9370	25	0.9843
10	0RU02	50	1.9685	90	3.5433	20	0.7874	50RU03	50	1.9685	110	4.3307	27	1.0630
11	55RU02	55	2.1654	100	3.9370	21	0.8268	55RU03	55	2.1654	120	4.7244	29	1.1417
12	60RU02	60	2.3622	110	4.3307	22	0.8661	60RU03	60	2.3622	130	5.1181	31	1.2205
13	65RU02	65	2.5591	120	4.7244	23	0.9055	65RU03	65	2.5591	140	5.5118	33	1.2992
14	70RU02	70	2.7559	125	4.9213	24	0.9449	70RU03	70	2.7559	150	5.9055	35	1.3780
15	75RU02	75	2.9528	130	5.1181	25	0.9843	75RU03	75	2.9528	160	6.2992	37	1.4567
16	80RU02	80	3.1496	140	5.5118	26	1.0236	80RU03	80	3.1496	170	6.6929	39	1.5354
17	85RU02	85	3.3465	150	5.9055	28	1.1024	85RU03	85	3.3465	180	7.0866	41	1.6142
18	90RU02	90	3.5433	160	6.2992	30	1.1811	90RU03	90	3.5433	190	7.4803	43	1.6929
19	95RU02	95	3.7402	170	6.6929	32	1.2598	95RU03	95	3.7402	200	7.8740	45	1.7717
20	100RU02	100	3.9370	180	7.0866	34	1.3386	100RU03	100	3.9370	215	8.4646	47	1.8504
21	105RU02	105	4.1339	190	7.4803	36	1.4173	105RU03	105	4.1339	225	8.8583	49	1.9291
22	110RU02	110	4.3307	200	7.8740	38	1.4961	110RU03	110	4.3307	240	9.4488	50	1.9685
24	120RU02	120	4.7244	215	8.4646	40	1.5748	120RU03	120	4.7244	260	10.2362	55	2.1654
26	130RU02	130	5.1181	230	9.0551	40	1.5748	130RU03	130	5.1181	280	11.0236	58	2.2835
28	140RU02	140	5.5118	250	9.8425	42	1.6535	140RU03	140	5.5118	300	11.8110	62	2.4409
30	150RU02	150	5.9055	270	10.6299	45	1.7717	150RU03	150	5.9055	320	12.5984	65	2.5591
32	160RU02	160	6.2992	290	11.4173	48	1.8898	160RU03	160	6.2992	340	13.3858	68	2.6772
34	170RU02	170	6.6929	310	12.2047	52	2.0472	170RU03	170	6.6929	360	14.1732	72	2.8346
36	180RU02	180	7.0866	320	12.5984	52	2.0472	180RU03	180	7.0866	380	14.9606	75	2.9528
38	190RU02	190	7.4803	340	13.3858	55	2.1654	190RU03	190	7.4803	400	15.7480	78	3.0709
40	200RU02	200	7.8740	360	14.1732	58	2.2835	200RU03	200	7.8740	420	16.5354	80	3.1496

Adapted from ABMA Std. 20, Table 1, Part 3.

8.5 BEARING FIT TOLERANCES

RADIAL BALL BEARING FIT TOLERANCES

	Shaft Fits						Housing Fits (all H6)									
			Shaft Diameter					200 Series Housing Bore					300 Series Housing Bore			
		Bearing	(inches)		(mm)		Bearing	(inches)		(mm)		Bearing	(inches)		(mm)	
Basic Number	Tolerance Class*	Bore mm	Maximum	Minimum	Maximum	Minimum	OD mm	Minimum	Maximum	Minimum	Maximum	OD mm	Minimum	Maximum	Minimum	Maximum
00	j5	10	0.3939	0.3936	10.004	9.998	30	1.1811	1.1816	30.000	30.016	35	1.3780	1.3786	35.000	35.016
01	j5	12	0.4726	0.4723	12.005	11.997	32	1.2598	1.2604	32.000	32.016	37	1.4567	1.4573	37.000	37.016
02	j5	15	0.5908	0.5905	15.005	14.997	35	1.3780	1.3786	35.000	35.016	42	1.6535	1.6541	42.000	42.016
03	j5	17	0.6695	0.6692	17.005	16.997	40	1.5748	1.5754	40.000	40.016	47	1.8504	1.8510	47.000	47.016
04	k5	20	0.7878	0.7875	20.011	20.002	47	1.8504	1.8510	47.000	47.016	52	2.0472	2.0479	52.000	52.019
05	k5	25	0.9847	0.9844	25.011	25.002	52	2.0472	2.0479	52.000	52.019	62	2.4409	2.4416	62.000	62.019
06	k5	30	1.1815	1.1812	30.011	30.002	62	2.4409	2.4416	62.000	62.019	72	2.8346	2.8353	72.000	72.019
07	k5	35	1.3785	1.3781	35.013	35.002	72	2.8346	2.8353	72.000	72.019	80	3.1496	3.1503	80.000	80.019
08	k5	40	1.5753	1.5749	40.013	40.002	80	3.1496	3.1503	80.000	80.019	90	3.5433	3.5442	90.000	90.022
09	k5	45	1.7722	1.7718	45.013	45.002	85	3.3465	3.3474	85.000	85.022	100	3.9370	3.9379	100.000	100.022
10	k5	50	1.9690	1.9686	50.013	50.002	90	3.5433	3.5442	90.000	90.022	110	4.3307	4.3316	110.000	110.022
11	k5	55	2.1660	2.1655	55.015	55.002	100	3.9370	3.9379	100.000	100.022	120	4.7244	4.7253	120.000	120.022
12	k5	60	2.3628	2.3623	60.015	60.002	110	4.3307	4.3316	110.000	110.022	130	5.1181	5.1191	130.000	130.025
13	k5	65	2.5597	2.5592	65.015	65.002	120	4.7244	4.7253	120.000	120.022	140	5.5118	5.5128	140.000	140.025
14	k5	70	2.7565	2.7560	70.015	70.002	125	4.9213	4.9223	125.000	125.025	150	5.9055	5.9065	150.000	150.025
15	k5	75	2.9534	2.9529	75.015	75.002	130	5.1181	5.1191	130.000	130.025	160	6.2992	6.3002	160.000	160.025
16	k5	80	3.1502	3.1497	80.015	80.002	140	5.5118	5.5128	140.000	140.025	170	6.6929	6.6939	170.000	170.025
17	k5	85	3.3472	3.3466	85.018	85.003	150	5.9055	5.9065	150.000	150.025	180	7.0866	7.0876	180.000	180.025
18	k5	90	3.5440	3.5434	90.018	90.003	160	6.2992	6.3002	160.000	160.025	190	7.4803	7.4814	190.000	190.029
19	k5	95	3.7409	3.7403	95.018	95.003	170	6.6929	6.6939	170.000	170.025	200	7.8740	7.8751	200.000	200.029
20	k5	100	3.9377	3.9371	100.018	100.003	180	7.0866	7.0876	180.000	180.025	215	8.4646	8.4657	215.000	215.029
21	m5	105	4.1350	4.1344	105.028	105.013	190	7.4803	7.4814	190.000	190.029	225	8.8583	8.8594	225.000	225.029
22	m5	110	4.3318	4.3312	110.028	110.013	200	7.8740	7.8751	200.000	200.029	240	9.4488	9.4499	240.000	240.029
24	m5	120	4.7255	4.7249	120.028	120.013	215	8.4646	8.4657	215.000	215.029	260	10.2362	10.2375	260.000	260.032
26	m5	130	5.1194	5.1187	130.033	130.015	230	9.0551	9.0562	230.000	230.029	280	11.0236	11.0249	280.000	280.032
28	m5	140	5.5131	5.5124	140.033	140.015	250	9.8425	9.8436	250.000	250.029	300	11.8110	11.8123	300.000	300.032
30	m5	150	5.9068	5.9061	150.033	150.015	270	10.6299	10.6312	270.000	270.032	320	12.5984	12.5998	320.000	320.036
32	m5	160	6.3005	6.2998	160.033	160.015	290	11.4173	11.4186	290.000	290.032	340	13.3858	13.3872	340.000	340.036
34	m6	170	6.6945	6.6935	170.040	170.015	310	12.2047	12.2060	310.000	310.032	360	14.1732	14.1746	360.000	360.036
36	m6	180	7.0882	7.0872	180.040	180.015	320	12.5984	12.5998	320.000	320.036	380	14.9606	14.9620	380.000	380.036
38	m6	190	7.4821	7.4810	190.046	190.017	340	13.3858	13.3872	340.000	340.036	400	15.7480	15.7494	400.000	400.036
40	m6	200	7.8758	7.8747	200.046	200.017	360	14.1732	14.1746	360.000	360.036	420	16.5354	16.5370	420.000	420.040

*For hollow shafts, use j6 instead of j5, m5 instead of k5, n6 instead of m5, and p6 instead of m6.

Shaft rotates–outer ring stationary. Adapted from ABMA Std. 7, Tables 1, 2, 3 and 4. The above shaft (interference) fits and housing (clearance) fits are practical for most standard electric motor applications. Where wider tolerances (housing fits) are permissible, use tolerance class H7 instead of H6. Some applications such as hollow shaft motors, spindle motors and vibrator motors require a different tolerance class than shown in the table. For bearing series other than 200 and 300 (e.g., 60xx), identify shaft and housing fits from different rows according to the bearing bore and OD.

CYLINDRICAL ROLLER BEARING FIT TOLERANCES

	Shaft Fits						Housing Fits (all H6)									
			Shaft Diameter (inches)		Shaft Diameter (mm)			200 Series Housing Bore (inches)		200 Series Housing Bore (mm)			300 Series Housing Bore (inches)		300 Series Housing Bore (mm)	
Basic Number	Tolerance Class	Bearing Bore mm	Maximum	Minimum	Maximum	Minimum	Bearing OD mm	Minimum	Maximum	Minimum	Maximum	Bearing OD mm	Minimum	Maximum	Minimum	Maximum
00	m5	10	0.3942	0.3939	10.012	10.006	30	1.1811	1.1816	30.000	30.016	35	1.3780	1.3786	35.000	35.016
01	m5	12	0.4730	0.4727	12.015	12.007	32	1.2598	1.2604	32.000	32.016	37	1.4567	1.4573	37.000	37.016
02	m5	15	0.5911	0.5908	15.015	15.007	35	1.3780	1.3786	35.000	35.016	42	1.6535	1.6541	42.000	42.016
03	m5	17	0.6699	0.6696	17.015	17.007	40	1.5748	1.5754	40.000	40.016	47	1.8504	1.8510	47.000	47.016
04	m5	20	0.7881	0.7877	20.017	20.008	47	1.8504	1.8510	47.000	47.016	52	2.0472	2.0479	52.000	52.019
05	m5	25	0.9850	0.9846	25.017	25.008	52	2.0472	2.0479	52.000	52.019	62	2.4409	2.4416	62.000	62.019
06	m5	30	1.1818	1.1814	30.017	30.008	62	2.4409	2.4416	62.000	62.019	72	2.8346	2.8353	72.000	72.019
07	m5	35	1.3787	1.3783	35.020	35.009	72	2.8346	2.8353	72.000	72.019	80	3.1496	3.1503	80.000	80.019
08	m5	40	1.5756	1.5752	40.020	40.009	80	3.1496	3.1503	80.000	80.019	90	3.5433	3.5442	90.000	90.022
09	m6	45	1.7726	1.7720	45.025	45.009	85	3.3465	3.3474	85.000	85.022	100	3.9370	3.9379	100.000	100.022
10	m6	50	1.9695	1.9689	50.025	50.009	90	3.5433	3.5442	90.000	90.022	110	4.3307	4.3316	110.000	110.022
11	m6	55	2.1666	2.1658	55.030	55.011	100	3.9370	3.9379	100.000	100.022	120	4.7244	4.7253	120.000	120.022
12	m6	60	2.3634	2.3626	60.030	60.011	110	4.3307	4.3316	110.000	110.022	130	5.1181	5.1191	130.000	130.025
13	m6	65	2.5603	2.5595	65.030	65.011	120	4.7244	4.7253	120.000	120.022	140	5.5118	5.5128	140.000	140.025
14	n6	70	2.7574	2.7567	70.039	70.020	125	4.9213	4.9223	125.000	125.025	150	5.9055	5.9065	150.000	150.025
15	n6	75	2.9543	2.9536	75.039	75.020	130	5.1181	5.1191	130.000	130.025	160	6.2992	6.3002	160.000	160.025
16	n6	80	3.1511	3.1504	80.039	80.020	140	5.5118	5.5128	140.000	140.025	170	6.6929	6.6939	170.000	170.025
17	n6	85	3.3483	3.3474	85.045	85.023	150	5.9055	5.9065	150.000	150.025	180	7.0866	7.0876	180.000	180.025
18	n6	90	3.5451	3.5442	90.045	90.023	160	6.2992	6.3002	160.000	160.025	190	7.4803	7.4814	190.000	190.029
19	n6	95	3.7420	3.7411	95.045	95.023	170	6.6929	6.6939	170.000	170.025	200	7.8740	7.8751	200.000	200.029
20	n6	100	3.9388	3.9379	100.045	100.023	180	7.0866	7.0876	180.000	180.025	215	8.4646	8.4657	215.000	215.029
21	n6	105	4.1357	4.1348	105.045	105.023	190	7.4803	7.4814	190.000	190.029	225	8.8583	8.8594	225.000	225.029
22	n6	110	4.3325	4.3316	110.045	110.023	200	7.8740	7.8751	200.000	200.029	240	9.4488	9.4499	240.000	240.029
24	n6	120	4.7262	4.7253	120.045	120.023	215	8.4646	8.4657	215.000	215.029	260	10.2362	10.2375	260.000	260.032
26	n6	130	5.1202	5.1192	130.052	130.027	230	9.0551	9.0562	230.000	230.029	280	11.0236	11.0249	280.000	280.032
28	n6	140	5.5139	5.5129	140.052	140.027	250	9.8425	9.8436	250.000	250.029	300	11.8110	11.8123	300.000	300.032
30	p6	150	5.9082	5.9072	150.068	150.043	270	10.6299	10.6312	270.000	270.032	320	12.5984	12.5998	320.000	320.036
32	p6	160	6.3019	6.3009	160.068	160.043	290	11.4173	11.4186	290.000	290.032	340	13.3858	13.3872	340.000	340.036
34	p6	170	6.6956	6.6946	170.068	170.043	310	12.2047	12.2060	310.000	310.032	360	14.1732	14.1746	360.000	360.036
36	p6	180	7.0893	7.0883	180.068	180.043	320	12.5984	12.5998	320.000	320.036	380	14.9606	14.9620	380.000	380.036
38	p6	190	7.4834	7.4823	190.079	190.050	340	13.3858	13.3872	340.000	340.036	400	15.7480	15.7494	400.000	400.036
40	p6	200	7.8771	7.8760	200.079	200.050	360	14.1732	14.1746	360.000	360.036	420	16.5354	16.5370	420.000	420.040

Shaft rotates–outer ring stationary. Adapted from ABMA Std. 7, Tables 1, 2, 3 and 4. The above shaft (interference) fits and housing (clearance) fits are practical for most standard electric motor applications. Where wider tolerances (housing fits) are permissible, use tolerance class H7 instead of H6. Some applications such as hollow shaft motors, spindle motors and vibrator motors require a different tolerance class than shown in the table.

8.6 BEARING CLEARANCE

Sleeve bearing clearance depends on many factors

By Chuck Yung, EASA Senior Technical Support Specialist

Editor's Note: Sleeve bearings are also known as babbitt bearings, white metal bearings and plain bearings.

Can you settle a disagreement about the subject of sleeve bearing clearance? We have several contradictory guidelines, some of them from manufacturers. Which is best?

***

It is fair to say that our outlook on life is colored by experiences. In our industry, those experiences often are shaped by the customers we serve. A good example is this question about the proper clearance between a shaft and the sleeve bearing it rides in. Chances are each of us has a rule of thumb for bearing clearance, probably related to shaft diameter. Some of these may look familiar:

- One thousandth, plus 1 per inch of shaft diameter (0.1 mm / cm)
- Two thousandths, plus 1 per inch of shaft diameter (0.2 mm / cm)
- 0.0015" per inch of shaft diameter (0.15 mm / cm)
- 0.002" per inch of shaft diameter (0.3 mm / cm)

FIGURE 8-6

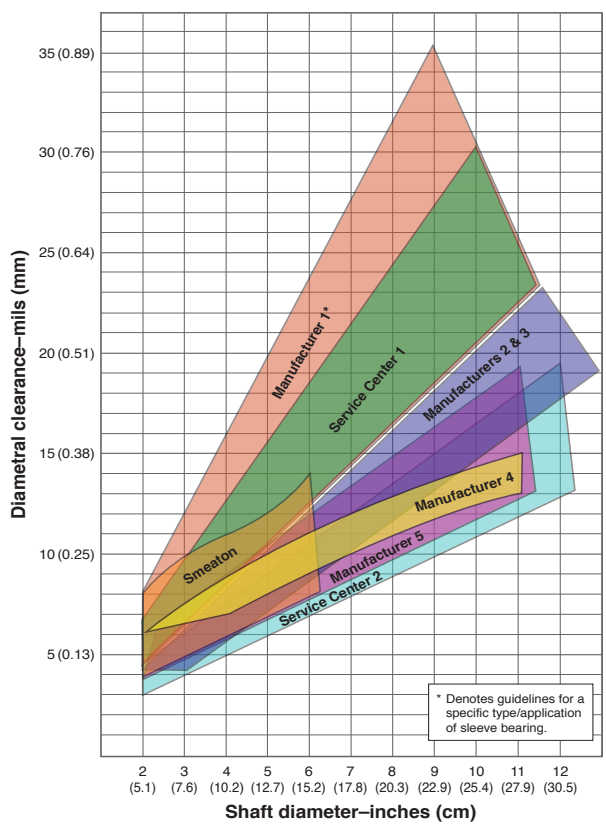

Sleeve bearing clearances (babbitt lined).

DEPENDS ON APPLICATION

They can't all be right, yet many of us may have used one of these rules (probably not the same one, either!) with great success. Which one, if any, is correct? The answer depends on the application.

If your customer base includes slow-speed synchronous motors, you have probably seen motors operating fine with more than twice the recommended clearance. The person who works primarily on 2-pole petrochemical motors knows they can vibrate when the bearing clearance is even slightly excessive.

One of the first things to consider when looking at guidelines for bearing clearance is whether it is radial or diametral. We are going to talk in terms of diametral clearance–total clearance–because we physically measure the shaft and bearing diameters to determine the clearance. Another reason to use diametral clearance: In operation, a horizontal machine rarely has the same radial clearance at the 12:00 and 6:00 positions.

To illustrate just how many guidelines there are for this simple topic, I have combined guidelines from five manufacturers and three other reputable sources into a single graph (Figure 8-6). First we need to recognize that most **horizontal** electrical rotating machinery uses what is called a **cylindrical overshot** bearing design. This term describes how the bearing is lubricated–with oil supplied by oil rings.

To understand why each of those rules-of-thumb exists, let's sum up the factors a designer of sleeve bearing motors must take into account. Remember the relationship between power, torque and rpm?

$$\text{Torque (lb-ft)} = \text{hp} \times 5252 / \text{rpm}$$

or

$$\text{Torque (N·m)} = \text{kW} \times 9550 / \text{rpm}$$

The higher the **torque** (lower speed and/or higher hp/kW rating), the larger the required shaft diameter. The **heavier** the rotor, the bigger the bearing must be. The **faster** the speed, the smaller the allowable journal diameter. The **longer** the bearing, the greater the clearance required to get the oil out.

CONSIDERATIONS IN SLEEVE BEARING DESIGN

The major factors, in order of importance, that influence sleeve bearing design include:

- Weight to be supported
- Peripheral speed of shaft journal
- Viscosity of lubricant
- Operating temperature

Designers of electrical rotating equipment generally keep sleeve bearing load pressure around 145 psi (1 Mpa), as

compared with the 580-725 psi (4-5 Mpa) used for internal combustion engines. Some older motors used even lower bearing load pressure, so vintage machines sometimes have a larger bearing than a modern motor with similar characteristics.

Excessive weight can distort soft babbitt, so bearing cross-sectional area increases in proportion to the load. Higher hp/kW ratings mean more torque, hence a larger shaft diameter. Peripheral speed increases with the rpm, or when the shaft diameter increases. For hydrostatic, cylindrical-overshot bearings (the sleeve bearings most common to electrical machinery) the upper peripheral speed limit is approximately 6,000 ft (1,830 m) per minute. Higher speeds require special designs, starting with 2-lobe, then 4-lobe bearings, as well as special lubrication methods (Figure 8-7).

Most rotating electrical machinery sleeve bearing lubrication is supplied by oil rings, so a minimum speed is required to ensure that the rings deliver sufficient oil to the bearings. That minimum speed is around 25-30 ft (7.5-9 m) per minute; be *very* cautious when an application, such as a VFD, significantly alters the original design. A force-lubrication system may be required, or even hydraulic jacking, to lift the shaft onto an oil film before starting.

When the peripheral speed limit restricts journal diameter, the designer must increase the length of the sleeve bearing. That brings us to the ratio of bearing length to diameter (L/D). For reasons of economy, the preference is for a 1:1 ratio–e.g. a bearing with 3" bore diameter and 3" length. There are drawbacks to a proportionally longer bearing. As the L/D ratio increases:

- Less oil flow exiting the bearing = higher bearing temperature
- Shaft deflection = diagonal contact with ends of bearing
- Longer machine = Higher production costs

The longer and heavier the rotor, or the more flexible the shaft, the more shaft deflection (Figure 8-8) should be expected. Shaft deflection may force the designer to increase the clearance between the sleeve bearing and journal. Longer bearings require longer shaft journals, which in turn require longer bearing brackets and larger machines. Self-aligning bearings are used to facilitate assembly, to overcome variations in machining of the end bracket and bearing housing, and to reduce fitting time. They do not shift to correct orientation changes after the motor has been fully assembled.

Viscosity of the oil is less of a factor than the supported weight and peripheral speed, although one the designer must consider. The OEM manual specifies the recommended oils for the machine so, unless bearing design modifications have occurred, we as repairers should stick with the recommended lubricants. Sometimes, a 2-pole machine benefits from a lower viscosity oil, but such changes should only be made in consultation with the OEM or customer, and even then with caution.

Because one of the variables the designer considered is peripheral speed of the shaft, a sleeve bearing machine operating from an adjustable-speed drive adds a new set of challenges. It may be necessary to add forced-oil lubrication to supplement the oil rings.

FIGURE 8-7

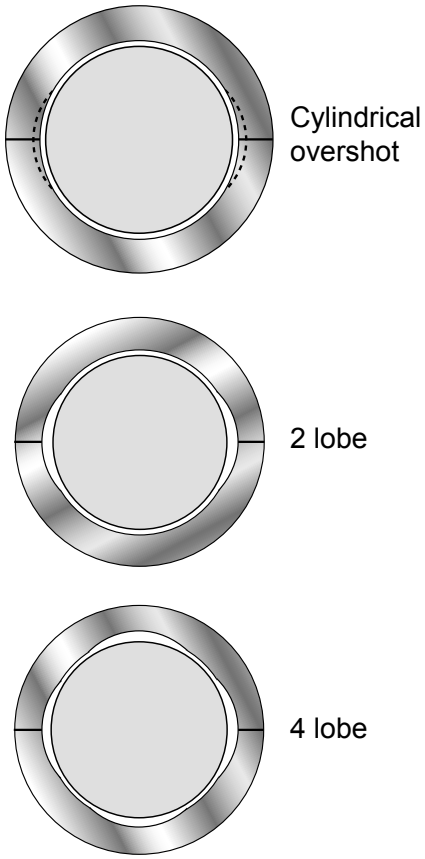

Bearing shapes

FIGURE 8-8

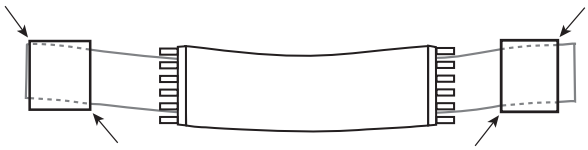

A heavy rotor increases shaft sag. The journal may rub the bearings at the places indicated by arrows. To prevent that, the designer increases the clearance.

VERTICAL MACHINES: WHY ARE THEY DIFFERENT?

To begin with, the same spindly shaft and heavy rotor does not result in the shaft deflection we experience in horizontal machines. While the shaft rests on the bottom of a horizontal bearing, it hangs more-or-less centered in the vertical thrust bearing. There is no radial sag to worry about. As long as there is sufficient radial clearance for the oil film, the vertical guide bearing needs no additional clearance. Guide bearings for vertical sleeve bearing machines are not the cylindrical

overshot design, and should have much less clearance than horizontal machines with similar journal diameters. Contact the OEM or EASA Technical Support for guidance.

LABYRINTH SEALS

The closer the labyrinth seal is to the shaft, the better it will seal. Of course, if it touches the shaft both may be damaged, and you can expect rapid increases in temperature and vibration levels (especially axial on the end that is rubbing.) Rather than determining labyrinth seal clearance from the shaft diameter, it is better to work from the sleeve bearing clearance. A good guideline, used by several manufacturers, is that the labyrinth seal should have 0.002 - 0.004" (0.05 - 0.10 mm) more radial clearance than the bearing. It should be obvious that the labyrinth seal clearance for a vertical machine can be set closer than for a comparable horizontal machine. (Note: Materials that are susceptible to galling may require larger clearance.)

CONCLUSION

There are a lot of sleeve bearing clearance tables circulating around our industry, but some of them are specific to a specific type of motor–like low-speed synchronous motors–and should never be applied universally. In broad terms:

- Low-speed motors can operate with more clearance.
- Longer bearings require more clearance.
- Vertical sleeve bearings require less clearance.
- Hermetics require tighter clearance.
- Labyrinth seals should be as close as possible, without contacting the shaft.

About those rules of thumb: If you have had good success with one for your routine jobs, watch out for sleeve bearings that differ from your usual work. Examples would include 2-poles versus low-speed machines, a significantly different length/diameter ratio, or vertical machines. In those cases, contact the manufacturer or EASA Technical Support for help.

Note: This article was first published in *EASA Currents* (August 2005). It was reviewed and updated as necessary in September 2019.

8.7 LOCK NUTS AND LOCK WASHERS FOR BALL BEARINGS

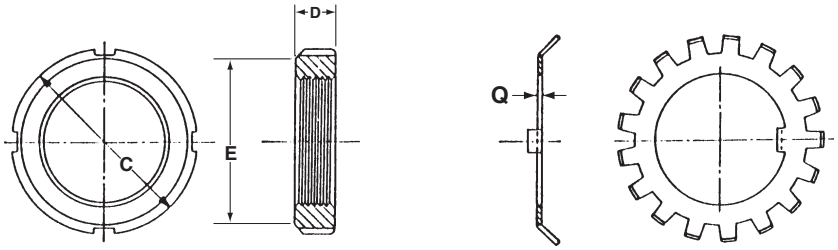

DIMENSIONS IN INCHES

LOCK NUTS

Lock nut number	Threads per inch	Diameter C	Outside thickness D MIN.	Outside thickness D MAX.	Face diameter E MIN.	Face diameter E MAX.
N-00	32	3/4	0.209	0.229	0.605	0.625
N-01	32	7/8	0.303	0.323	0.699	0.719
N-02	32	1	0.303	0.323	0.793	0.813
N-03	32	1 1/8	0.334	0.354	0.918	0.938
N-04	32	1 3/8	0.365	0.385	1.105	1.125
N-05	32	1 9/16	0.396	0.416	1.261	1.281
N-06	18	1 1/4	0.396	0.416	1.480	1.500
N-07	18	2 1/16	0.428	0.448	1.793	1.813
N-08	18	2 1/4	0.428	0.448	1.980	2.000
N-09	18	2 17/32	0.428	0.448	2.261	2.281
N-10	18	2 11/16	0.490	0.510	2.418	2.438
N-11	18	2 31/32	0.490	0.510	2.636	2.656
N-12	18	3 5/32	0.521	0.541	2.824	2.844
N-13	18	3 3/8	0.553	0.573	3.043	3.063
N-14	18	3 5/8	0.553	0.573	3.283	3.313
AN-15	12	3 7/8	0.584	0.604	3.533	3.563
AN-16	12	4 5/32	0.584	0.604	3.814	3.844
AN-17	12	4 13/32	0.615	0.635	4.001	4.031
AN-18	12	4 21/32	0.678	0.698	4.251	4.281
AN-19	12	4 15/16	0.709	0.729	4.533	4.563
AN-20	12	5 3/16	0.735	0.760	4.783	4.813
AN-21	12	5 7/16	0.735	0.760	4.970	5.000
AN-22	12	5 23/32	0.766	0.791	5.251	5.281
AN-24	12	6 1/8	0.798	0.823	5.658	5.688
AN-26	12	6 1/4	0.860	0.885	6.158	6.188
AN-28	12	7 3/32	0.923	0.948	6.501	6.531
AN-30	12	7 11/16	0.954	0.979	7.033	7.063
AN-32	8	8 1/16	1.016	1.041	7.398	7.438
AN-34	8	8 21/32	1.048	1.073	7.991	8.031
AN-36	8	9 1/16	1.079	1.104	8.335	8.375
AN-38	8	9 15/32	1.110	1.135	8.741	8.781
AN-40	8	9 27/32	1.173	1.198	9.116	9.156
N-44	8	11	1.230	1.260	9.803	9.843

LOCK WASHERS

Lock washer number	Thickness Q
W-00	0.042
W-01	0.042
W-02	0.042
W-03	0.042
W-04	0.042
W-05	0.050
W-06	0.050
W-07	0.050
W-08	0.058
W-09	0.058
W-10	0.058
W-11	0.063
W-12	0.063
W-13	0.063
W-14	0.063
W-15	0.072
W-16	0.072
W-17	0.072
W-18	0.094
W-19	0.094
W-20	0.094
W-21	0.094
W-22	0.125
W-24	0.125
W-26	0.125
W-28	0.125
W-30	0.156
W-32	0.156
W-34	0.156
W-36	0.156
W-38	0.156
W-40	0.156
W-44	0.156

Note: Verify threads per inch on the shaft with a thread gage prior to installation. Refer to bearing manufacturer's specifications for lock nuts on precision bearings.

LOCK NUTS AND LOCK WASHERS FOR BALL BEARINGS

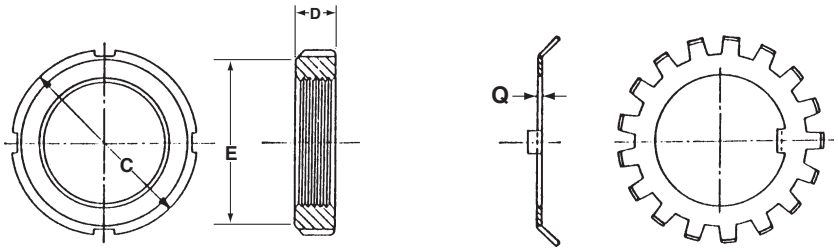

DIMENSIONS IN MILLIMETERS

LOCK NUTS

Lock nut number	Thread size	Threads per mm	Outside diameter C	Thickness D	Face diameter E
AN05	M25x1.5	1.5	38	7	32
AN06	M30x1.5	1.5	45	7	38
AN07	M35x1.5	1.5	52	8	44
AN08	M40x1.5	1.5	58	9	50
AN09	M45x1.5	1.5	65	10	56
AN10	M50x2	2.0	70	11	61
AN11	M55x2	2.0	75	11	67
AN12	M60x2	2.0	80	11	73
AN13	M65x2	2.0	85	12	79
AN14	M70x2	2.0	92	12	85
AN15	M75x2	2.0	98	13	90
AN16	M80x2	2.0	105	15	95
AN17	M85x2	2.0	110	16	102
AN18	M90x2	2.0	120	16	108
AN19	M95x2	2.0	125	17	113
AN20	M100x2	2.0	130	18	120
AN21	M105x2	2.0	140	18	126
AN22	M110x2	2.0	145	19	133
AN23	M115x2	2.0	150	19	137
AN24	M120x2	2.0	155	20	138
AN25	M125x2	2.0	160	21	148
AN26	M130x2	2.0	165	21	149
AN27	M135x2	2.0	175	22	160
AN28	M140x2	2.0	180	22	160
AN29	M145x2	2.0	190	24	171
AN30	M150x2	2.0	195	24	171
AN31	M155x3	3.0	200	25	182
AN32	M160x3	3.0	210	25	182
AN33	M165x3	3.0	210	26	193
AN34	M170x3	3.0	220	26	193
AN36	M180x3	3.0	230	27	203
AN38	M190x3	3.0	240	28	214
AN40	M200x3	3.0	250	29	226
AN44	Tr220x4	4.0	280	32	250

LOCK WASHERS

Lock washer number	Thickness Q
AW05	1.2 mm
AW06	1.2 mm
AW07	1.2 mm
AW08	1.2 mm
AW09	1.2 mm
AW10	1.2 mm
AW11	1.2 mm
AW12	1.5 mm
AW13	1.5 mm
AW14	1.5 mm
AW15	1.5 mm
AW16	1.8 mm
AW17	1.8 mm
AW18	1.8 mm
AW19	1.8 mm
AW20	1.8 mm
AW21	1.8 mm
AW22	1.8 mm
AW23	2.0 mm
AW24	2.0 mm
AW25	2.0 mm
AW26	2.0 mm
AW27	2.0 mm
AW28	2.0 mm
AW29	2.0 mm
AW30	2.0 mm
AW31	2.5 mm
AW32	2.5 mm
AW33	2.5 mm
AW34	2.5 mm
AW36	2.5 mm
AW38	2.5 mm
AW40	2.5 mm
AL44	4.0 mm

Note: Verify threads per millimeter on the shaft with a thread gage prior to installation. Refer to bearing manufacturer's specifications for lock nuts on precision bearings.

8.8 UNDERSTANDING AND ADJUSTING THRUST ROLLING BEARING SYSTEMS FOR VERTICAL MOTORS

Manny Garcia
Miami, FL

Chuck Yung
EASA Senior Technical Support Specialist

Thrust rolling bearing systems

Vertical motor bearing systems can be much more complicated than those used in horizontal motors. This article describes the bearings systems used on vertical motors up to 500 hp (375 kW) of all speeds and enclosures. It also explains how to adjust these bearing systems to avoid premature failures.

COMPARISON OF HORIZONTAL AND VERTICAL BEARING SYSTEMS

General-purpose, grease-lubricated horizontal motors are designed to mount either horizontally or vertically and can be direct coupled or radially connected to the driven equipment (Figure 8-9). These motors normally have ball bearings (Figure 8-10) or roller bearings. Large, horizontally mounted motors may use hydrodynamic, oil-lubricated sleeve bearings that are not designed for external loading on the bearing.

Definite-purpose vertical motors can be grease- or oil-lubricated. They are normally direct coupled and are designed to operate with a wide range of thrust loading vertical bearing systems (Figure 8-11). Large vertical motors with extremely high downward thrust may use a hydrodynamic, tilting plate bearing in conjunction with a guide (pilot) bearing.

FIGURE 8-9

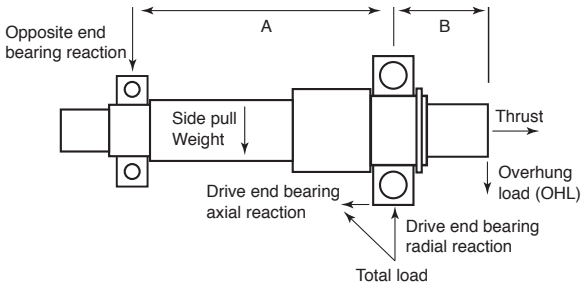

For drive end bearing:

Radial reaction = OHL $\frac{(A+B)}{A}$ + $\frac{SP \& W(A)}{2}$

Axial reaction = Thrust + W

P = Total load = X(radial) + Y(axial)

L10 life (hrs) = $\frac{1 \times 10^6}{60n}\left(\frac{C}{P}\right)^a$

a = 3 for ball bearing, 3.33 for roller bearing
n = Speed (rpm)
C = Bearing dynamic load rating
Y = Axial to radial conversion factor
X = Radial conversion factor
W = Weight

Free-form design of horizontal motor bearing system.

FIGURE 8-10

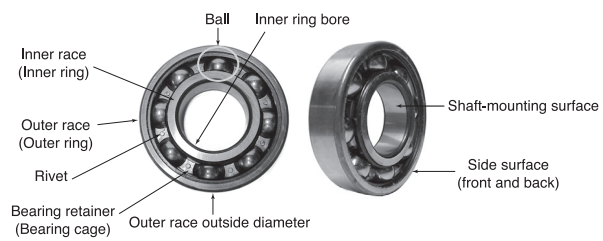

Ball bearing nomenclature

FIGURE 8-11

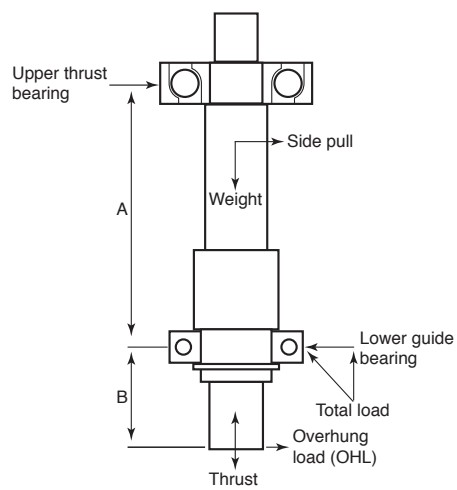

For drive end bearing:

Radial reaction = OHL $\frac{(A+B)}{A}$ + $\frac{SP(A)}{2}$

Axial reaction = Thrust + W

P = Total load = X(radial) + Y(axial)

L10 life (hrs) = $\frac{1 \times 10^6}{60n}\left(\frac{C}{P}\right)^a$

a = 3 for ball bearing, 3.33 for roller bearing
n = Speed (rpm)
C = Bearing dynamic load rating
Y = Axial to radial conversion factor
X = Radial conversion factor
W = Weight

Thrust is now a greater percentage of total load

Free-form design of vertical motor bearing system.

Figure 8-12 shows common bearing configurations for solid-shaft vertical motors. Figure 8-13 illustrates bearing systems for hollow-shaft vertical motors.

FIGURE 8-12: SOLID-SHAFT VERTICAL BEARING ASSEMBLIES

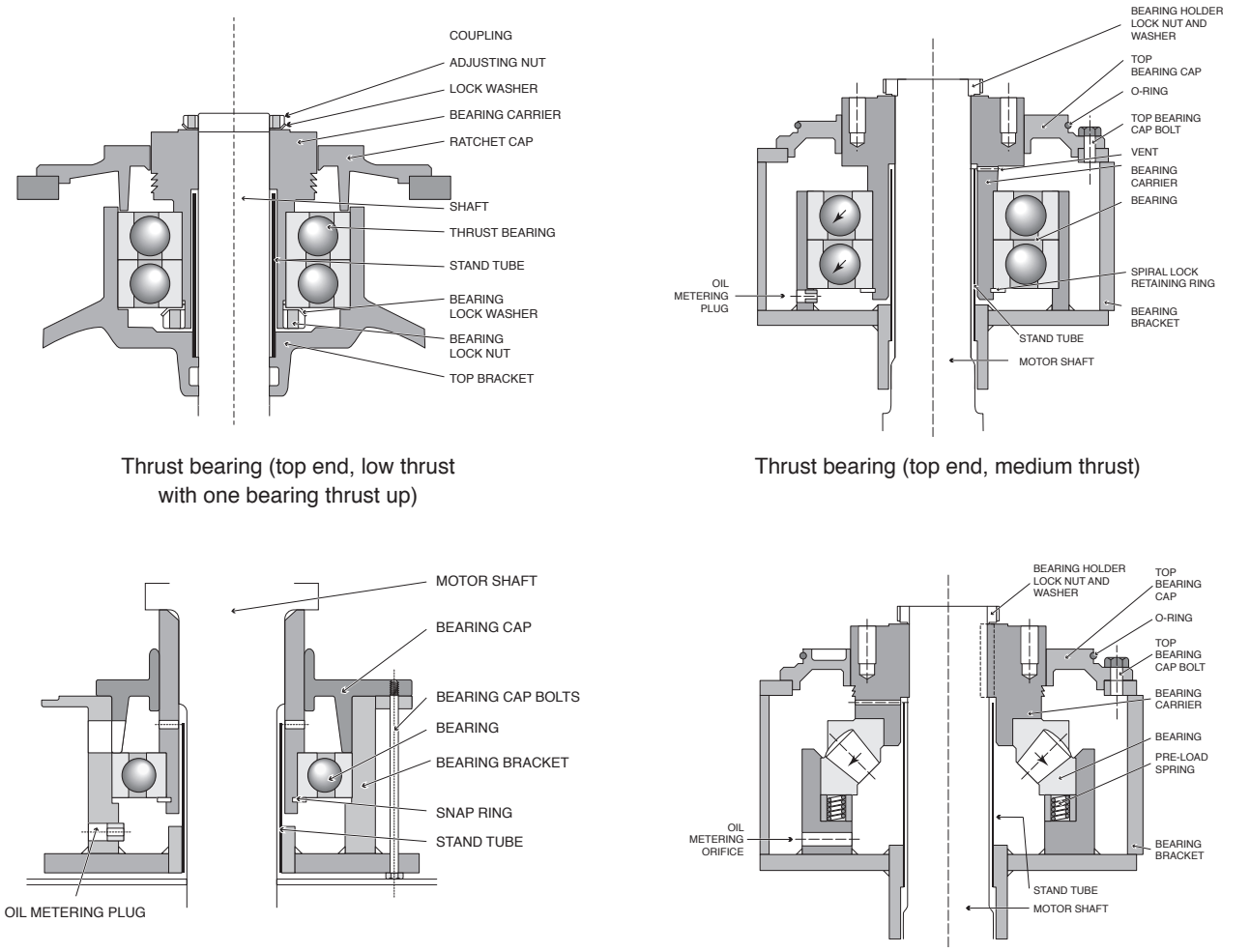

Thrust bearing (top end, low thrust with one bearing thrust up)

Thrust bearing (top end, medium thrust)

Pilot bearing (bottom end guide bearing)

Spherical roller thrust bearing (top end, high thrust)

VERTICAL BEARING SYSTEM DESIGN AND VIBRATION

Issues associated with vertical bearing system design specifications may affect the reed critical frequency of the motor. Even two motors of similar weight may have considerably different resonant frequencies. This is usually discovered when a critical motor is replaced and the spare has unexpectedly high vibration levels.

The solution is to change the stiffness and/or mass of the motor-pump assembly, and change (preferably lower) its center of gravity. For hollow-shaft machines, this may be accomplished by adding a 2”-8” (5-20 cm) thick steel spacer beneath the motor base. The thicker/heavier the plate, the greater the effect will be.[11]

Vibration also increases due to poor mating of the thrust bearing. In one case when an end user specified thrust bearing capacity far beyond what the pump generated, the manufacturer deliberately offset the rotor high so the magnetic centering force would exert at least the minimum thrust load on the bearing.

Thrust bearings do not all have the same angle of contact, retainer material, and so forth. Changes to one aspect of a bearing may significantly alter its performance.

Installation is also important. Establish benchmarks for all new installations and after each repair. Any changes in vibration levels, bearing temperature or motor current may warrant attention to determine the cause.

The bearing systems in vertical motors are more complex than those in comparable horizontal motors. Basic understanding of their unique characteristics, thrust and lubrication requirements is critical to assure proper selection, care and operation, and often can make it possible to identify and solve application problems.

Bearing systems for vertical machines are robust and should yield long, trouble-free service. For this reason, any failure should prompt detailed root-cause failure analysis to uncover the cause and evaluate possible remedies. Unless a misapplication is identified or the pump thrust requirements have changed, it is essential to duplicate the original bearing system.

FIGURE 8-13: HOLLOW-SHAFT VERTICAL BEARING ASSEMBLIES

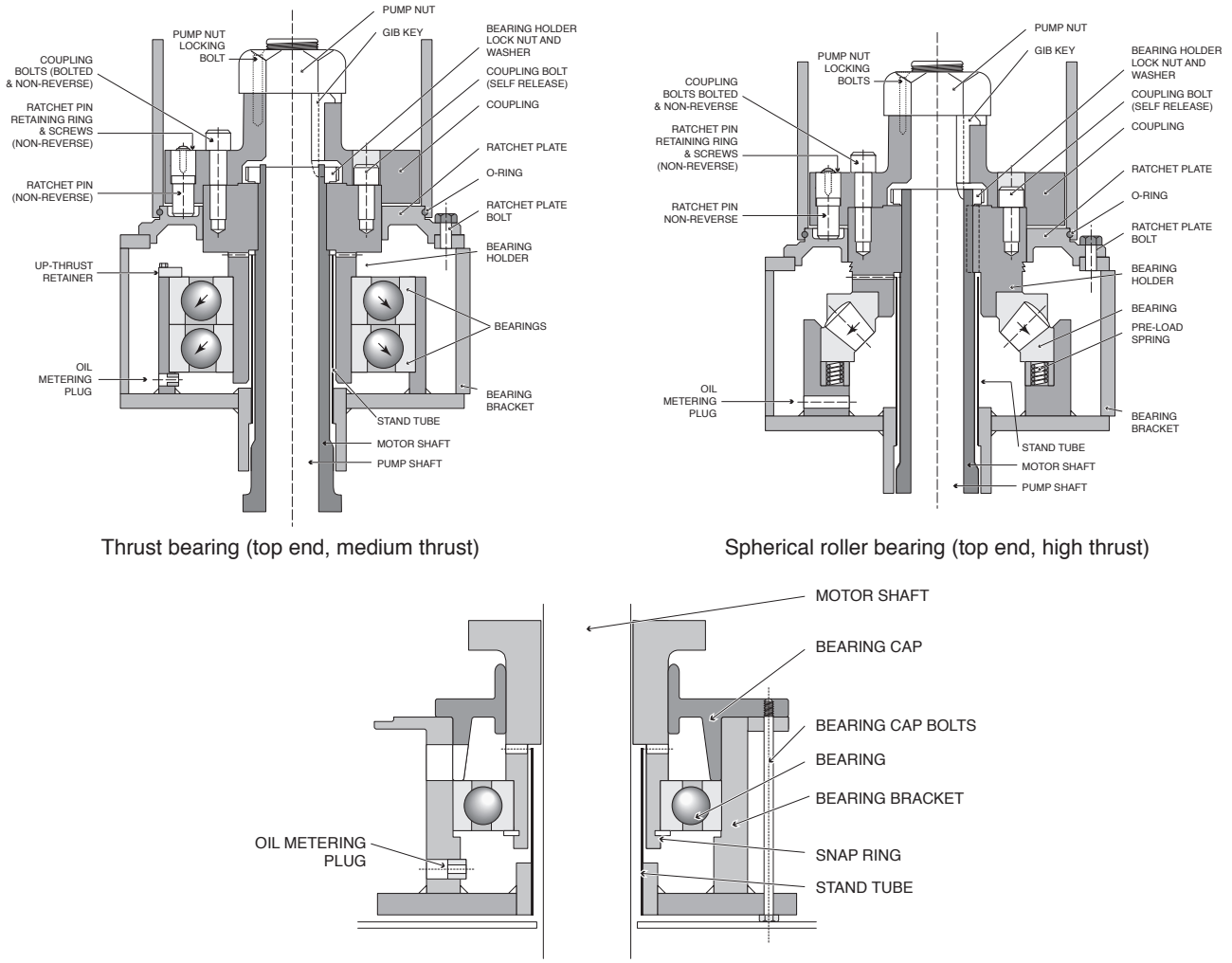

Thrust bearing (top end, medium thrust)

Spherical roller bearing (top end, high thrust)

Pilot bearing (bottom end guide bearing)

Adjustment of thrust rolling bearings for vertical motors

This section describes procedures for removing, mounting and installing thrust bearings for vertical motors. It also explains how to measure and adjust thrust bearing end play on both solid-shaft and hollow-shaft vertical motors.

THRUST BEARING TYPES

There are basically two kinds of thrust bearings for vertical motors: angular contact ball bearings and spherical roller bearings (with or without springs). See Figure 8-14 and Figure 8-15 (Page 8-25).

PRE-REMOVAL PROCEDURES

Vertical motors with angular contact ball or spherical roller thrust bearings require a minimum external thrust load. Prior to disassembly, measure the distance from the top of the shaft to the top of the lock nut (in decimal places) with a depth micrometer to serve as a reference to thrust (Figure 8-16, Page 8-25). Record this measurement for both hollow shaft and solid shaft motors, but do not rely on it. There are many explanations for why this dimension could be incorrect!

Before removing the bearing, determine the bearing type and whether the mounting is tandem or back-to-back (Figure 8-17, Page 8-25). The outer race will have a wide flange and a narrow one.

- If the wide flange of the top bearing meets the narrow flange of the bottom bearing, the bearings are tandem.
- If both narrow flanges meet, they are face to face.
- If both wide flanges meet, they are back-to-back.

A good confirmation is to check for parts needed to secure the bearing set to be capable of upthrust without being pushed out of the bearing housing. There should be a ring holding down the outer race of the upper bearing and a large AN nut or spiral-lock snap ring on the skirt of the bearing mount that prevents the bearings from being pushed off of the journal.

During disassembly carefully record all bearing numbers. Good practice is to make a sketch of the bearing thrust orientation.

FIGURE 8-14

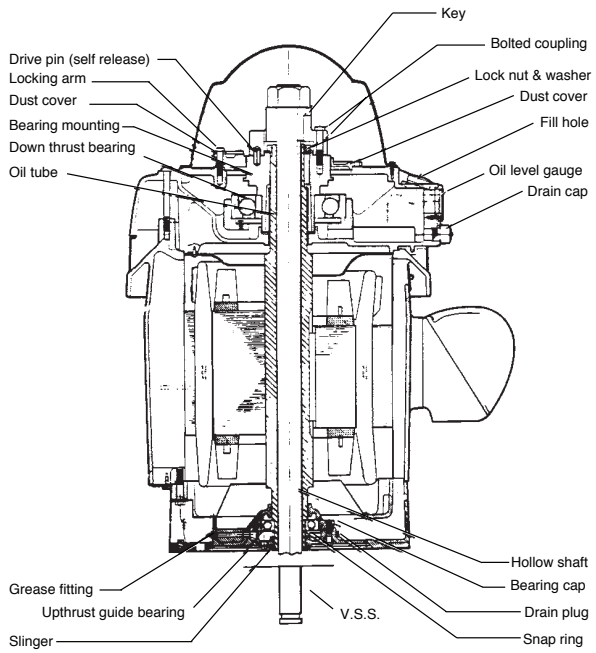

Typical angular contact bearing construction.

FIGURE 8-15

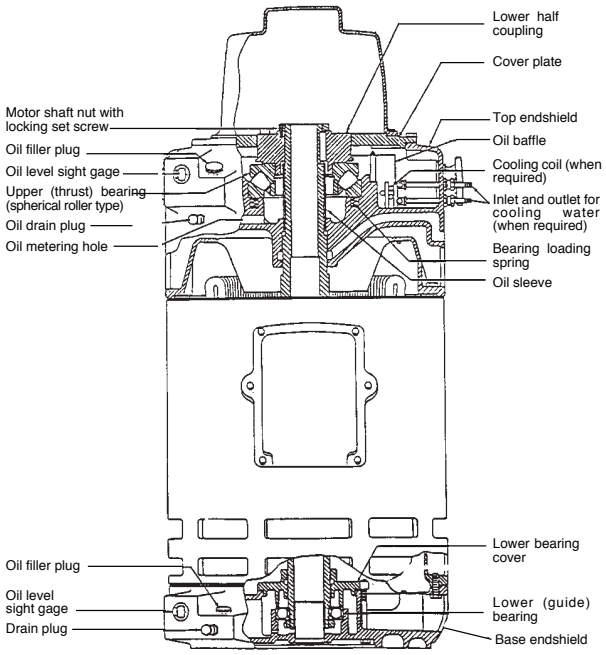

Typical spherical bearing construction.

FIGURE 8-16

(Shaft must be pushed up from the bottom to measure endplay.)

Top Shaft - Top Endbell

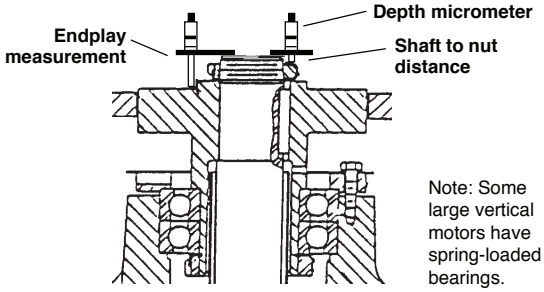

Solid-shaft motor.

FIGURE 8-17

Thrust loading in both directions

Back-to-back (DB)

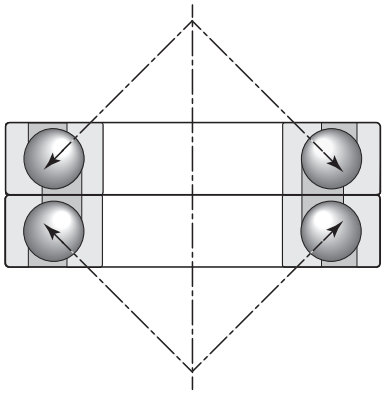

Face-to-face (DF)

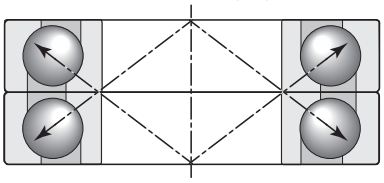

High downthrust loads

Tandem (DT)

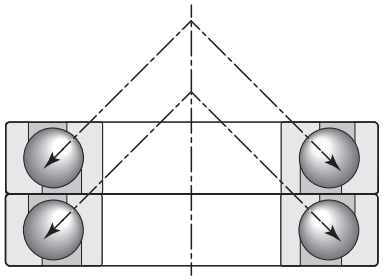

Types of mounting.

MOUNTING AND INSTALLATION

1. Do not face bearings the wrong way.

   Angular contact bearings are designed to take the thrust load in one direction only. During assembly, it is important not to install such bearings backwards and not to apply the thrust load against the snap (counter bore) side of the outer ring. Refer to the sketch made during disassembly.

   Mounting the bearings incorrectly could cause any one of the following problems:
   - The bearing will not support the thrust load.
   - The bearing will not give proper rigidity.
   - The bearing may separate.
2. Do not mix bearings from different manufacturers.

   Duplex bearings are single-row bearings that are specially ground for use in matched sets. They are sometimes designated as "1/2 pair" or "universally ground" and may be used as DB or DT bearings.
3. Do not mix duplex bearings from different manufacturers.

DETERMINING END PLAY SETTINGS

If the motor is disassembled for any reason, the rotor end play must be readjusted. Depending upon the type of thrust bearing, use one of the following procedures to determine the correct end play settings.

1. **Spherical roller thrust bearings and angular contact bearings (with springs)**

   Setting the correct end play for preload on spherical roller or angular contact thrust bearings (with springs) requires a controlled assembly method, due to various deflections internal to the motor and friction of lock nut threads from spring force. An end play setting of 0.005" to 0.010" (0.13 to 0.25 mm) is recommended to allow the lower guide bearing to return to an unload position when external thrust is applied to the motor (Figure 8-18).

FIGURE 8-18

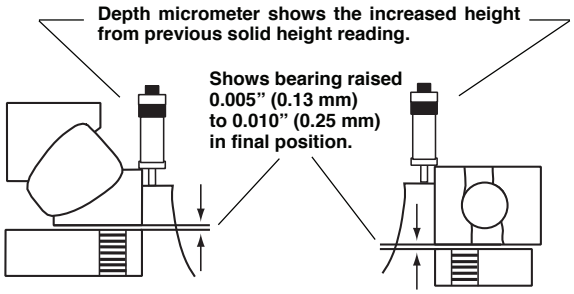

   To find the correct end play settings for these bearings:
   - Place the spring retainer (minus springs) and the lower thrust washer of the bearing into the bore of the upper bearing bracket.
   - Using a depth micrometer, measure the distance between the top of the lower thrust washer and the faced surface on top of the bearing housing. Record this dimension to three decimal places. This is for reference only; do not rely on this value.

     Note: Certain motor designs require removal of the oil baffle to provide access for depth micrometer measurements.
   - Add 0.005" (0.13 mm) and 0.010" (0.25 mm), respectively, to the recorded dimension to determine the correct minimum and maximum end play settings for the unit.
   - Reassemble the bearing with springs and set the end play using one of the methods described under "End play Adjustment Methods."

Thickness

Note: Motors built with spherical roller thrust or angular contact bearings with springs require a minimum external thrust load sufficient to compress the upper die springs and unload the lower guide bearing from axial spring thrust. Refer to the motor's spring thrust plate for the required minimum thrust. *Do not run the motor without the minimum external thrust load for more than fifteen minutes* because lower bearing damage may occur.

2. **Angular contact ball bearings (without springs)**

   No preliminary measurements are required to set end play with these bearings. End play may be set using either of the methods described below.
   - To correctly adjust the rotor end play setting on units with angular contact ball bearings without springs, position a dial indicator to read the axial movement of the shaft (Figure 8-19). Turn the rotor adjusting lock nut until no further upward movement of the shaft is indicated. Then zero the dial indicator and loosen the lock nut to lower the shaft enough to prevent preloading of the bottom guide bearing at room temperature.

FIGURE 8-19

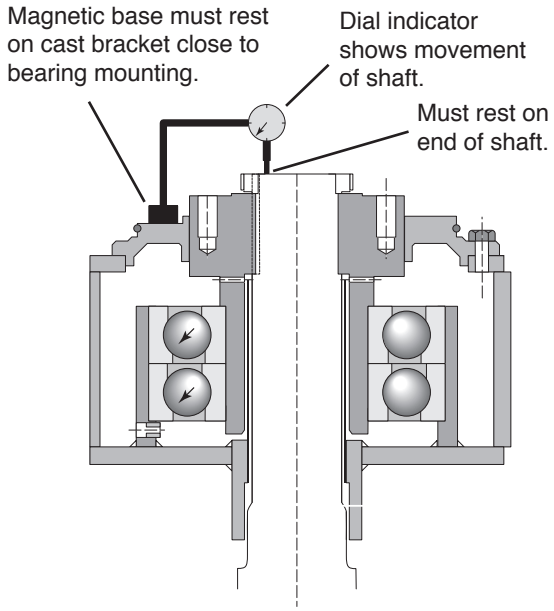

End play adjustment.

Various manufacturers give this distance as a range, typically between 0.005" to 0.015" (0.13 to 0.39 mm). The purpose is to position the bottom guide bearing as high as possible within the lower bearing housing to provide for sufficient room for thermal growth of the shaft.

- Solid-shaft motors having two (or more) opposed angular contact bearings are locked on the mount for up-and-down thrust and should not be adjusted for "thrust." Rather, the bearing carrier must be clamped to prevent movement on the shaft. The bearing carrier in these designs should be shouldered against a step on the shaft, and the upper nut tightened to clamp the bearing carrier and prevent relative movement between the bearing carrier and shaft. ***If a motor was designed to have facing or back-to-back thrust bearings, it is necessary to clamp both the outer and inner races.***
- Some manufacturers rely on the lower guide bearing to handle up-thrust. Others use one thrust bearing in the up-thrust orientation. For a vertical solid-shaft motor, the "AH" (shaft extension) prevents the guide bearing in the lower bracket from taking external thrust. If a motor is found to have thrust bearings in opposing directions of thrust, and the inner or outer races are not clamped, contact the end user to determine if the pump requires the ability to handle up-thrust. If so, modification will be required.
- The inner races can be clamped by a bearing lock nut (the most common method) or by a spiral-lock snap ring. A conventional snap ring is not suitable for this purpose.

END PLAY ADJUSTMENT METHODS

Method 1

Lift the motor with the overhead crane. Slowly lower the motor until the shaft touches the floor. Place a dial indicator on top of the motor to measure shaft movement.

Lower the motor gently until there is no further shaft movement. Tighten the lock nut snug. Raise the motor to confirm there is no shaft movement. Only for motors with all thrust bearings mounted thrust down: Back the nut off to lower the shaft between 0.005" and 0.015" (0.13 and 0.39 mm) and lock the nut in place.

Notes

- If a crane is not available, the same thing can be accomplished by tightening the top nut to lift the shaft. Tighten the nut until the shaft no longer moves upward; then loosen the nut to drop the shaft the prescribed distance. Use of a crane is preferred to avoid deforming the locking notches in the AN lock nut.
- When an N or AN lock nut is used, it must be accompanied by a lock washer of the same designation (e.g., an AN 15 nut requires a W-15 locking washer).

Special equipment required:

- Overhead crane
- Spanner wrench
- Dial indicator

FIGURE 8-20

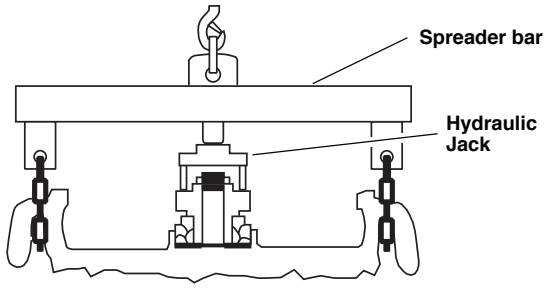

Mounting springs are compressed, and only the rotor is lifted by lock nut.

Method 2: Spring-loaded bearings only

This method uses a spreader bar with chains that wrap around the lifting lugs, a crane to lift the spreader bar, and an appropriately-sized hydraulic or bottle jack. The jack, supported by two steel blocks of equal thickness on top of the bearing mounting, pushes against the spreader bar to compress the mounting springs (Figure 8-20). To make the lock nut easier to turn on very heavy solid-shaft rotors, lift the rotor using a second jack placed beneath the motor base. Now position a dial indicator as shown in Figure 8-19 and turn the lock nut until there is no further upward movement of the shaft. Finally, loosen the lock nut to obtain the correct end play range (determined earlier) and secure it with the lock washer.

Note: This method uses ordinary shop tools and equipment and allows end play settings on larger vertical motors to be checked quickly. The lock nut lifts only the weight of the rotor.

TABLE 8-3: BOLT TORQUE VALUES

Grade 8 bolt size	Torque* lb•ft	Torque* N•m
5/16"	20	27
3/8"	37	50
1/2"	90	122
5/8"	180	244
3/4"	320	434
1"	710	963
Metric class 8.8	**Torque* lb•ft**	**Torque* N•m**
M8x1.00	18	24
M10x1.50	35	48
M12x1.75	59	80
M12x2.00	94	126
M18x2.50	210	285
M20x2.50	293	397

* Torque values are for dry threads.

Special equipment required:

- Overhead crane
- Large spreader bar with chains and locking bolts
- Spanner wrench
- Hydraulic jack or bottle jack (appropriately-sized for the rotor weight)
- Depth micrometer
- Metal blocks
- Dial indicator

COUPLINGS FOR HOLLOW-SHAFT MOTORS

To ensure proper functioning, coupling bolts for hollow-shaft motors must be tightened to the torque values recommended by the manufacturer. If these are not available, Table 1 may be used as a guide.

Caution: The installer is always responsible for tightening coupling bolts to the proper torque values. This includes instances when the coupling comes mounted on the motor. Failure to do so may result in the coupling bolts shearing, and extensive damage to the equipment.

Note: This article was first published as *EASA Tech Note 21* (February 1995), using information provided by U.S. Electrical Motors. It was reviewed and updated as necessary in October 2018.

8.9 BEARING FAILURE ANALYSIS

Understanding bearing vibration frequencies

By Dave Felten
Mechanical Field Service Department
L&S Electric, Inc.
Schofield, WI

Welcome to the age of predictive maintenance technologies. More and more of our customers are using tools such as vibration analysis to assess the health of their rotating equipment. Many of them are also using this technology to assess new and rebuilt rotating equipment once it's installed and running. This serves two main purposes:

- It demonstrates the quality of the newly acquired/repaired equipment (taking the burden off the supplier/service center should the equipment vibrate once it's installed).
- It provides a baseline for trending.

Unfortunately, these initial vibration readings can be pushed into an "alarm status" by many customer-related issues such as poor coupling alignment and/or machine installation. This is why it's so important for today's repair facility to provide the customer with "baseline" vibration data gathered during its final test run, providing evidence that the rotating equipment ran within general vibration guidelines before being shipped.

Vibration frequency analysis can expose many mechanical and electrical problems in an electric motor. This article is discusses one of these: Bearing defects**.**

FIGURE 8-21

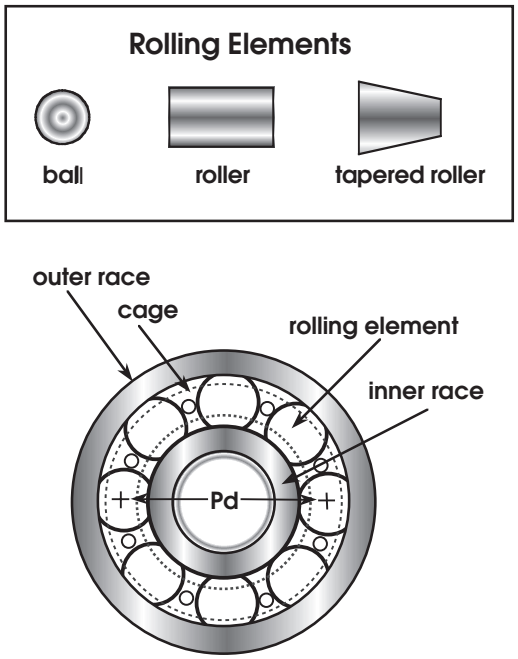

Components of rolling element bearings.

ROLLING ELEMENT BEARING DEFECTS

Defects in general rolling element bearings can be generated by fatigue, wear, poor installation, improper lubrication and, occasionally, manufacturing faults in the bearing components.

Being the typical bearing found in electric motors, the rolling element bearing is made up of the following components (Figure 8-21):

- Outer race
- Inner race
- Cage
- Rolling element (ball, roller or tapered roller)

Figure 8-21 also shows the pitch diameter (Pd), which is the span between the centers of two opposite rolling elements.

When a bearing spins, any irregularity in the raceway surfaces or in the roundness of the rolling elements excites periodic frequencies called **fundamental defect frequencies.**

These are:

- FTF–Fundamental train frequency (frequency of the cage)
- BSF–Ball spin frequency (circular frequency of each rolling element as it spins)
- BPFO–Ball pass frequency of the outer race (frequency created when all the rolling elements roll across a defect in the outer race)
- BPFI–Ball pass frequency of the inner race (frequency created when all the rolling elements roll across a defect in the inner race)

Fundamental defect frequencies depend upon the bearing geometry and shaft speed. Once you identify the type of bearing installed, you can either calculate the defect frequencies yourself or request the defect multipliers from the manufacturer. (Providers of vibration analysis software often incorporate a database that contains these multipliers from various bearing manufacturers.)

TABLE 8-4: BEARING DEFECT FREQUENCIES

Bearing ID	Number of rolling elements	FTF	BSF	BPFO	BPFI
9436	19	0.434	3.648	8.247	10.753
9437	19	0.434	3.648	8.247	10.753
9442	22	0.443	4.191	9.740	12.260

Example

If you have the defect multipliers at your disposal, the process of calculating the defect frequency is as follows:

1. Look up the bearing number that is exhibiting the suspect vibration frequency on a table like Table 1.
2. Multiply this number by the shaft speed mated with this bearing to determine the defect frequency that would be generated by a defect on the element in question (Figure 8-22).

9.740 x 351 rpm shaft speed = 3419 cpm

FIGURE 8-22

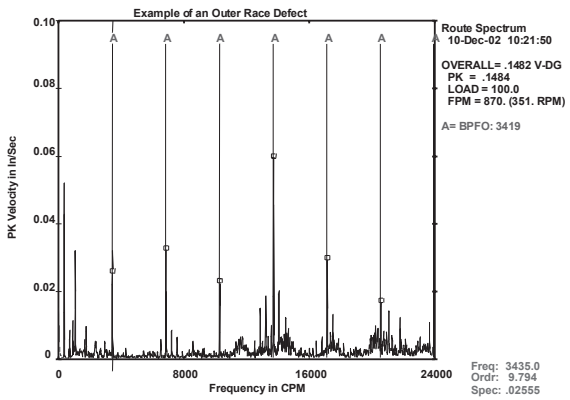

Outer race bearing defect.

If the frequency and harmonics (multiples) of it are present on the vibration spectra, you most probably have an outer race bearing defect. It could be a spall on the raceway, electrical fluting, false brinelling acquired during bearing storage or equipment transport, and so on.

Be advised that there will be occasions when the calculated defect frequencies don't exactly match the bearing defect frequencies that appear in the vibration spectra.

Typically, this is due to higher than normal thrust loads, which cause the bearing to run at a different contact angle. These abnormal thrust loads can be caused by such sources as misalignment.

Note that not all bearing manufacturers use the same number of rolling elements in a particular bearing size.

The most common bearing problem is the outer race defect in the load zone; inner race faults are the next most common. It is very rare to see a fault at the bearings ball spin frequency (BSF).

Action step. If of any of these four fundamental fault frequencies are present, the repair technician should replace the bearing and ensure that the housing fits and shaft journals are within tolerance.

Finally, it's worth discussing the presence of mechanical looseness, which manifests itself as harmonics of 1x running speed on a new or rebuilt bearing housing or journal. This indication of looseness could be coming from poor base mounting or one of the following:

- Loose housing-to-outer race fits
- Loose journal-to-inner race fits
- Excessive internal bearing clearance

For those interested in **calculating** the defect frequencies, the formulas are listed below. Today, it is difficult to get these parameters. Typically the manufacturer will simply supply one with the multipliers.

You'll need to find the following key parameters:

1. Rolling element diameter
2. Pitch diameter
3. Number of rolling elements
4. Contact angle
5. Speed

Formula 1: $FTF=S/2 \times [1 - (Bd/Pd \times \cos\Theta)]$

Formula 2: $BSF=Pd/2Bd \times S \times [1 - (Bd/Pd \times \cos\Theta)2]$

Formula 3: $BPFO=Nb/2 \times S \times [1 - (Bd/Pd \times \cos\Theta)]$

Formula 4: $BPFI=Nb/2 \times S \times [1 + (Bd/Pd \times \cos\Theta)]$

Where:

FTF	=	Fundamental train frequency (Hz)
BSF	=	Ball spin frequency (Hz)
BPFO	=	Ball pass frequency of outer race (Hz)
BPFI	=	Ball pass frequency of inner race (Hz)
Nb	=	Number of rolling elements
S	=	Speed (revolutions per second)
Bd	=	Ball diameter (in or mm)
Pd	=	Pitch diameter (in or mm)
Θ	=	Contact angle (degrees)

FIGURE 8-23

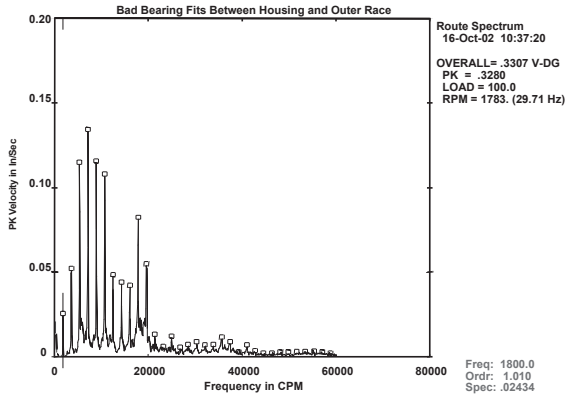

Looseness from wear or clearance problems.

SLEEVE BEARING DEFECTS

Sleeve bearings do not make use of rolling elements; rather, the shaft rides on a layer of lubricating oil inside the bearing bore. The lubricant is either sealed inside the bearing, gravity fed to the bearing, or pumped in (pressure fed).

Sleeve bearings which have excessive wear/clearance exhibit a vibration spectrum similar to the one in Figure 8-23. Notice the series of running speed harmonics (up to 10 or 20). Wiped sleeve bearings often show much higher vertical amplitudes than horizontal. A higher axial reading on one end than the other provides further indication, with the higher vibration level on the end with the damaged bearing.

In contrast, mechanical looseness caused by loose mounting bolts or cracks in the frame structure or bearing pedestal typically look like the spectrum in Figure 8-24.

FIGURE 8-24

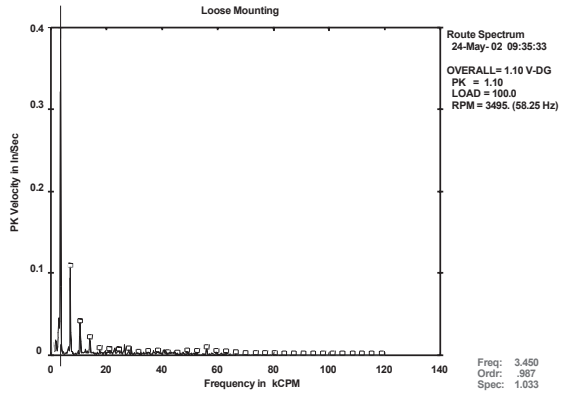

Structural looseness.

Excessive looseness can also cause subharmonic multiples at exactly 1/2 or 1/3 x rpm (.5x, 1.5x, 2.5x, etc.).

SUMMARY

The final vibration test in the service center helps ensure that the customer is receiving a top-notch repair. You'll rest easier knowing that your repair work passed general vibration guidelines, and your sales team will love selling this added value to your customers.

By providing documented vibration spectra with a rotating equipment repair service, your service center is less likely to receive a call immediately after the newly repaired equipment is reinstalled and starts vibrating. Customers will be more inclined to first verify things within their control, such as the mounting and coupling alignment.

Note: This article was first published in *EASA Currents* (September 2003). It was reviewed and updated as necessary in October 2018.

The cause and analysis of bearing failures in electric motors

By Austin H. Bonnett, Fellow IEEE
EASA Technology & Education Consultant

INTRODUCTION

Bearing failures account for the majority (50% to 65%) of all motor failures in industrial applications [1]. In the past few years with the wide use of PWM inverter drives, motor bearing failures have increased. The root cause of these failures is shaft-to-ground currents passing through the bearings.

BEARING STRESS

For convenience of analysis, it is useful to categorize the known stresses acting upon a bearing as follows:

1. Dynamic and static loading
2. Thermal
3. Vibration and shock
4. Environmental
5. Electrical current
6. Shear stress
7. Mechanical

It should be noted that as long as these stresses are kept within the design capabilities of the bearing system, premature failure should not occur. However, if any combination of them exceeds the bearing capacity, then the life may be drastically diminished and a catastrophic failure could occur.

BEARING FUNDAMENTALS

The prediction of rating fatigue life, commonly referred to as L_{10} life, is predicated on the assumption that the primary cause of failure is *material fatigue*. The L_{10} is the estimated time for 10% of a large population to fail. This relationship is shown in Figure 8-25. Life on this chart is relative to the load relationship. If L_{10} is one year, then L_{50} or the average life (as many have survived, as have failed) is 5 times that, or 5 years. This means that for an application with a L_{10} life of 1 year, 10% of the bearings may fail within that first year, and that one-half of the bearings may fail after 5 years.

The life for ball bearings is approximately inversely proportional to the load raised to the third power and inversely proportional to the speed. These relationships are only valid within certain constraints relating to the bearing size, design, lubrication, temperature, load and speed:

$$L_{10} = \frac{10^6}{60n}\left(\frac{C}{P}\right)^a$$

a = 3 for ball bearings n = Speed (rpm)

a = 10/3 for roller bearings

C = Bearing dynamic load rating

P = Equivalent bearing load

Each bearing has a limiting speed determined by its physical characteristics, which relates to the basic size, type, configuration and the type of lubrication used. Exceeding the bearing speed limit can result in excessive temperatures, deterioration of lubricant, vibration, and loss of the effective internal clearance, hence, a reduction in bearing life.

It should also be pointed out that grease-lubricated bearings normally have lower speed limits than oil-lubricated bearings, especially on larger motors.

The material and quality of the bearing cage will also affect the speed limitation of the bearing. Improved bearing geometry will allow for increased speed and lower noise levels.

FIGURE 8-25

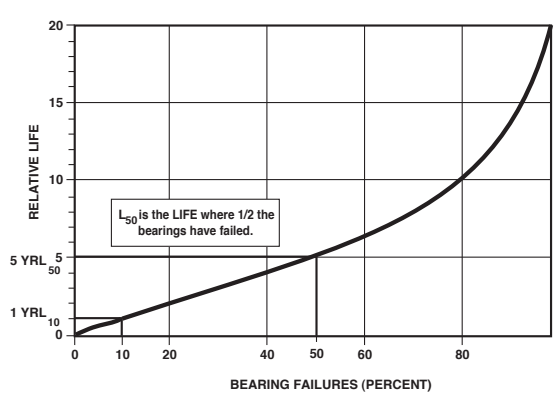

Relation of bearing failure and life with L and median life.

FIGURE 8-26

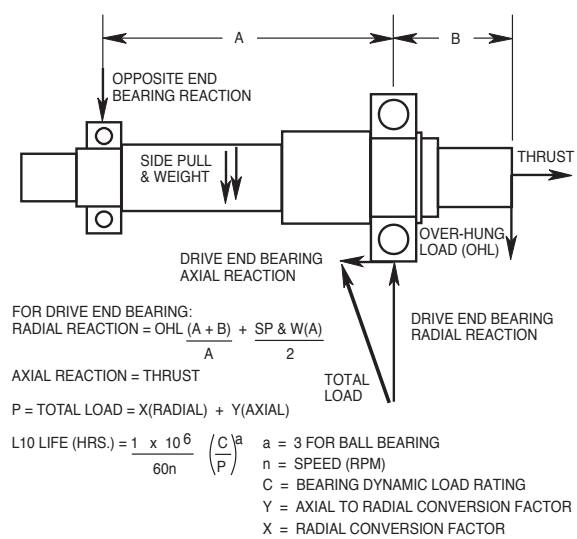

Horizontal bearing loading principles (rolling).

FIGURE 8-27

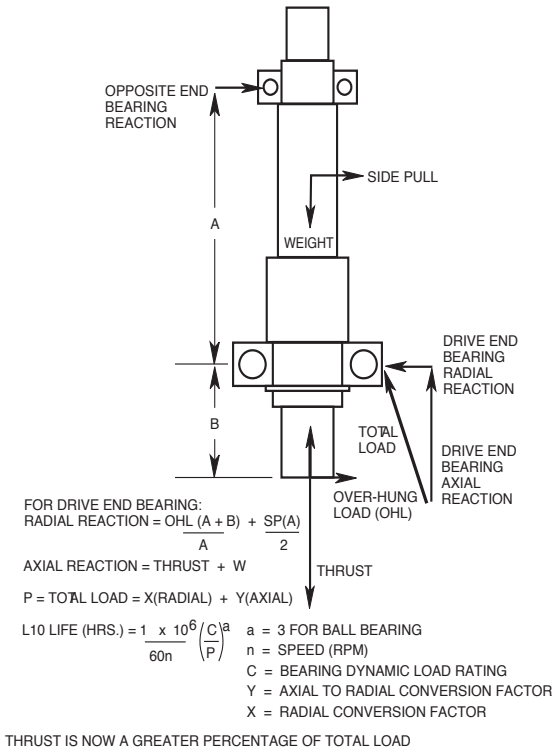

Vertical bearing loading principles (rolling).

Figure 8-26 and Figure 8-27 provide free-body diagrams of the bearing loading typically seen on horizontal and vertical motors.

STEPS IN THE BEARING FATIGUE PROCESS

1. Microscopic subsurface fractures of metal due to cyclic loading stress produce thin layers of surface, which flake off and are the beginning of spalling.
2. Some increase in noise and vibration will occur.
3. A change in critical dimensions will start.
4. Noise, vibration, friction, heat and wear accompanied by more advanced spalling; it is no longer safe or prudent to operate the machine.
5. The final step is advanced spalling, usually followed by a catastrophic failure.

THERMAL LIMITS

For rolling bearings, which are typically used in electric motors, the bearing operating temperature should not normally exceed 212°F (100°C), assuming that the bearing is properly applied and lubricated. Exceeding this limit can result in a permanent change in the bearing size due to metallurgical changes of the steel and thermal expansion. Both of these conditions can cause loss or reduction of the radial internal clearances, which can generate excessive temperatures and reduced life. At excessive temperatures, hastened by rapid oxidation of the lubricant, softening of the steel will lower the bearing fatigue limit and shorten the bearing life.

BEARING TEMPERATURE

Factors that influence the bearing temperature include:

1. Winding temperature
2. Lubricant temperature
3. Motor thermal circuit (cooling path and method)
4. Oil and grease viscosity
5. Bearing seals, shields and lubricant type
6. The amount of grease in the bearing and cavity
7. Radial internal clearance
8. Ambient conditions, including contamination
9. Bearing load and speed
10. Bearing type and size

LUBRICATION OF ROLLING BEARINGS

Proper lubrication of rolling bearings is critical for their successful performance. The major functions of the lubricant includes:

1. Providing a lubricant film for the various sliding and rolling contacts existing between the bearing elements.
2. Protecting the surface finish of the raceways and rolling elements from corrosion and rust.
3. Sealing the bearing from foreign materials.
4. Assisting in heat dissipation out of the bearing elements.

Grease lubrication is the method most commonly used on small- and medium-size electric motors in the range of 1 to 500 hp (1 to 375 kW) for horizontal machines. Sleeve bearings may be used in larger horsepower or 2-pole or high-speed applications. Vertical pump motors start to use oil-lubricated bearings at about 50 hp (35 kW). Neither application is covered in this article. The lubricant used for grease applications is usually a mixture of oil impregnated into a soap base. The soap base keeps the oil in suspension until it is removed by the moving members of the bearing and adheres to the surfaces. It is obvious that the supply of oil is depleted with time, as it gradually breaks down by oxidation. This process is a function of time, temperature, speed, load and environment.

Selection of the proper grease and its relubrication practices are critical for optimum bearing life.

Greases are usually made of a combination of soap or non-soap thickening materials mixed with mineral oil and additives. Soaps such as sodium, calcium, aluminum, lithium and barium are most commonly used. Polyurea is a synthetic organic thickener that has been widely used for electric motor bearings due to its elevated temperature properties. Polyurea is usually suitable for operating at temperatures in excess of 248°F (120°C), assuming the bearing material and clearance are sized properly. Rust and oxidation inhibitors and tackiness additives are included to enhance performance.

Present research is making it possible to predict bearing life more accurately. The use of Elasto Hydrodynamic Lubrication theory (EHL), introduced in the 1960s for calculating film thickness and pressure profiles, has been the key to many investigations and the base for understanding failure modes.

FIGURE 8-28

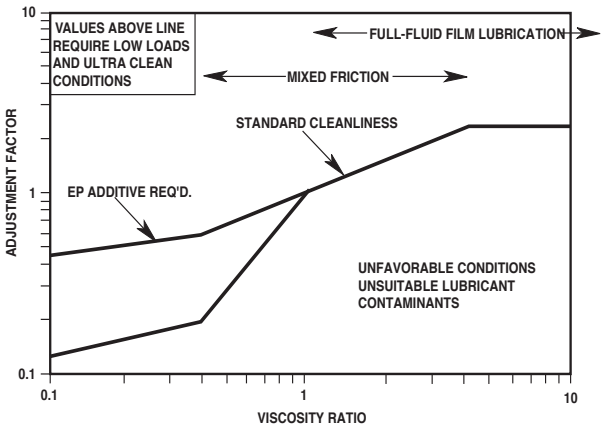

Life adjustment factor vs. viscosity ratio.

Since the early 1970s, lubrication and film thickness have been recognized as a significant factor in the life equations. The AFBMA Std. 9/ANSI B3.15 and IS0 281 standards were modified in 1972 and 1977, respectively, to include this effect by the addition of the a_2(material) and a_3(operating conditions) life adjustment factors [2]. Typical factors that have been used are shown in Figure 8-28. The latest efforts have been in the area of particle contamination and lubricant cleanliness. These new studies are tending to reshape the life prediction equations. According to one bearing manufacturer [3], the true nature of the failure mode mechanism was hidden and not understood until recently for the following reasons:

1. The high loads used to accelerate testing resulted in insufficient time for wear to manifest itself.
2. Surface initiated cracks from particle indentation that penetrated into deeper areas of high stress and culminate in flaking could not be distinguished from flaking caused by cracks formed below the surface.

FIGURE 8-29

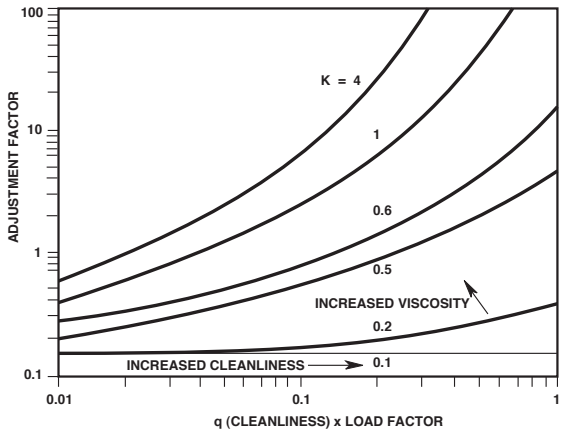

Life adjustment factor vs. contamination load factor based on a SKF factor.

Based on these latest studies [4], bearing life theory has been further refined to use a family of curves to establish an adjustment factor to the unmodified life. Of primary importance is the "n" factor used to correct for contamination. An accurate assessment of the "n" factor requires an analysis on a computer with accurate knowledge of the application. Figure 8-29 is typical of the curves used to determine the life adjustment factor for contamination. These refinements along with similar actions taken by other manufacturers commonly lead to a more precise determination of bearing life.

In addition to new life prediction theories, new lubricants and lubrication methods are being devised which will extend the operating life. Synthetic greases are capable of extending grease life significantly as indicated by the oxidation characteristics depicted in Figure 8-30. Although grease life is a function of more than just oxidation life, it is a good indicator of the type of gain that can be made using synthetic grease. Synthetic greases can be formulated with a lower sensitivity to temperature variations and therefore have a larger useful temperature range and the potential for lower losses.

FIGURE 8-30

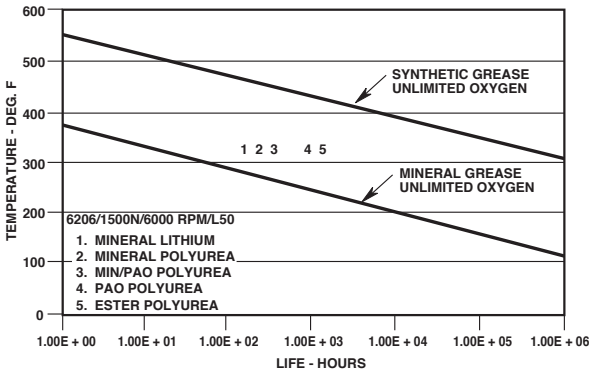

Grease temperature properties: temperature vs. oxidation life.

The question frequently asked about greases deals with the compatibility of them if mixed during the relubrication process. Table 8-5 is a guideline to assist in this process. It shows the results of grease compatibility tests performed by the National Grease Lubrication Institute (NLGL). [5] If in doubt, do not mix without checking with the lubricant manufacturer. For example, even though Polyurea Shear Stable and Polyurea Conventional have generally compatible thickeners and perform comparably (i.e., have similar dropping points, viscosities and oxidation resistance), they may contain different, incompatible additives–something the compatibility chart does not cover [6].

MOTOR BEARING LUBRICATION PRECAUTIONS

1. All motor housings, shafts, seals and relubrication paths must be kept thoroughly clean throughout the motor's life.
2. Avoid any dirt, moisture, chips or foreign matter contaminating the grease.

TABLE 8-5: GREASE COMPATIBILITY CHART

B = Borderline C = Compatible I = Incompatible	Al complex	Ba complex	Ca stearate	Ca 12 hydroxy	Ca complex	Ca sulfonate	Clay nonsoap	Li stearate	Li 12 hydroxy	Li complex	Polyurea	Polyurea SS
	1	2	3	4	5	6	7	8	9	10	11	12
1. Aluminum complex		I	I	C	I	B	I	I	I	C	I	C
2. Barium complex	I		I	C	I	C	I	I	I	I	I	B
3. Calcium stearate	I	I		C	I	C	C	C	B	C	I	C
4. Calcium 12 hydroxy	C	C	C		B	B	C	C	C	C	I	C
5. Calcium complex	I	I	I	B		I	I	I	I	C	C	C
6. Calcium sulfonate	B	C	C	B	I		I	B	B	C	I	C
7. Clay non-soap	I	I	C	C	I	I		I	I	I	I	B
8. Lithium stearate	I	I	C	C	I	B	I		C	C	I	C
9. Lithium 12 hydroxy	I	I	B	C	I	B	I	C		C	I	C
10. Lithium complex	C	I	C	C	C	C	I	C	C		I	C
11. Polyurea conventional	I	I	I	I	C	I	I	I	I	I		C
12. Polyurea shear stable	C	B	C	C	C	C	B	C	C	C	C	
This information is to be used only as a guide. Consult the manufacturer of each product before mixing different greases.												

3. Identify the temperature range for the application and select a grease that will perform satisfactorily.
4. Over greasing may cause elevated bearing and/or winding temperatures, which can lead to premature failures. Be sure to properly purge excess grease.
5. When regreasing, be sure that the new grease is compatible with the existing grease and that it has the desired performance characteristics.
6. Be aware that synthetic grease may not be as suitable as petroleum greases in high-speed applications. Some applications may require an extreme pressure (EP) grease.
7. Be aware that some common greases are not desirable for motor applications. If they are too soft, whipping can occur. If too stiff, noise and poor bleeding characteristics can occur.

CAUSE OF FAILURE

The most common causes of bearing failures are:

1. Thermal overloads
2. Inadequate or excessive lubrication
3. Contamination
4. Excessive loading (axial/radial combined)
5. Vibration
6. Misalignment
7. Improper shaft and housing fits
8. Machinery defects
9. Shaft-to-ground currents
10. Incorrect handling or mounting
11. Load life and fatigue factors
12. Improper application
13. Damage during transportation or storage

The challenge is to learn how to identify each type of failure with a high level of certainty and repeatability.

METHODOLOGY OF ANALYSIS

Five key areas that should be considered and related to one another in order to accurately diagnose the root cause of bearing failures are:

1. Failure mode
2. Failure patterns
3. Appearance of motor and bearings
4. Application data
5. Maintenance history

Brief discussions of each of these areas follow.

Failure mode

The failure modes can be grouped into the following 12 categories which are usually the result of the combined stresses acting on the bearing to the point of damage or failure. This is arbitrarily referred to as the failure mode.

1. Fatigue spalling, flaking
2. Fretting
3. Smearing
4. Skidding
5. Scoring
6. Abrasive, abnormal wear
7. Corrosion
8. Lubrication failure
9. True or false brinelling
10. Electric pitting or fluting
11. Cracks
12. Seizures

These modes do not represent the cause of the bearing problem; instead, they are the result or way that the problem is manifested.

Bearing failure patterns

Each bearing failure has a certain pattern that is closely associated with, yet different from, the failure mode. These patterns can be grouped into some combination of these categories:

1. Temperature levels (discoloration)
2. Noise levels
3. Vibration levels
4. Lubrication quality
5. Condition of mounting fits
6. Internal clearances
7. Contamination
8. Mechanical or electrical damage
9. Load paths and patterns (alignment)

Appearance of motor and bearings

When coupled with the mode and pattern of failure, the motor bearings and load appearance usually give a clue as to the possible cause of failure. The following checklist will be useful in the evaluation:

1. Are there signs of contamination in the area of the bearings? Any recent welding?
2. Are there signs of excessive temperature anywhere in the motor or driven equipment?
3. What is the quality of the bearing lubricant?
4. Are there signs of moisture or rust?
5. What is the condition of the coupling device used to connect the motor and the load?
6. What noise or vibration levels were present prior to failure?
7. Are there any missing parts on the rotating member?
8. What is the condition of the bearing bore, shaft journal, seals, shaft extension and bearing cap?
9. What was the direction of rotation, overhung load and axial thrust? Are they supported by the bearing wear patterns?
10. Does the outer or inner face show signs of fretting?
11. Is the motor mounted, aligned and coupled correctly?

Do not destroy the failed bearing until it has been properly inspected. It is also important to save a sample of the bearing lubricant.

Application data

It usually is difficult to reconstruct the actual operating conditions at the time of failure. However, knowledge of the general operating conditions will be helpful. The following items should be considered:

1. What are the load characteristics of the driven equipment and the loading at time of failure?
2. Does the load cycle or pulsate?
3. How many other units are successfully operating?
4. How often is the unit started?
5. What type of bearing protection is provided?
6. Where is the unit located, and what are the normal environmental conditions?
7. Is the motor enclosure adequate for the application?
8. What were the environmental conditions at time of failure?
9. Is the mounting base correct for proper support to the motor?
10. Is the belting or method of connection to the load correct for the application?

Maintenance history

An understanding of the past performance of the motor can give a good indication as to the cause of the problem. Again, a checklist may be helpful.

1. How long has the motor been in service?
2. Have any other motor failures been recorded, and what was the nature of the failures?
3. What failures of the driven equipment have occurred? Was any welding done?
4. When was the last time any service or maintenance was performed?
5. What operating levels (temperature, vibration, noise, etc.) were observed prior to the failure? What tripped the motor off the line?
6. What comments were received from the equipment operator regarding the failure or past failures?
7. How long was the unit in storage or sitting idle prior to starting?
8. What were the storage conditions?
9. How often is the unit started? Were there shutdowns?
10. Were correct lubrication procedures utilized?
11. Have any changes been made to surrounding equipment?
12. What procedures were used in adjusting belt tensions?
13. Are the pulleys positioned on the shaft correctly and as close to the motor bearing as possible?

SUMMARY AND CONCLUSIONS

There are numerous ways to go about failure analysis. The procedure proposed here is a simple one that can be easily taught and communicated to employees with a wide range of skills and backgrounds. Usually this type of analysis will quickly eliminate factors that are not contributing to the failure. When the problem is reduced to the one or two most likely culprits, thoughtful analysis will usually lead to the correct conclusion. It is not one's brilliance that leads to the truth; instead, it is the ability to sort that which is important from among all of the unrelated data available.

APPENDIX I: BEARING PROTECTION

Increased bearing operating temperatures, vibration or noise levels may indicate impending problems or failure. It may be desirable to measure these variables on routinely or continuously. If the equipment is part of the motor, it may have gages, meters, alarms or shutdown features.

The following is a brief discussion of the methods commonly used to provide this protection.

Bearing temperature protection

Table 8-6 provides a general guide for bearing temperature limits.

TABLE 8-6: BEARING TEMPERATURE LIMITS

	Lubricants	
	Standard	Synthetic
Normal	176°F (80°C) or lower	230°F (110°C)
Alarm	194°F (90°C)	248°F (120°C)
Shutdown	212°F (100°C)	266°F (130°C)

Specific applications may require slightly different limits. For most applications, actual temperatures will usually be lower than those above. For maximum protection, the user should determine the "normal" bearing operating temperature for the application and adjust the "alarm" setpoint 18°F (10°C)

higher. (Do not exceed the "critical" temperature indicated above, except in extreme emergency).

The detectors are normally mounted with the temperature-sensitive probe in contact with the bearing outer race for grease- or oil-lubricated bearings. Where capillary bulb detectors are used, the bulb is placed in oil in contact with or close proximity to the bearing race. The probe is in contact with the bearing shell for Kingsbury plate and sleeve bearings.

TABLE 8-7: BEARING TEMPERATURE DETECTION DEVICES

Detector type	Alarm	Shutdown	Temp. reading	Operate auxiliary equipment
Switch	Yes	Yes (1)	No	Yes
Indicator & switch	Yes	Yes (1)	Yes	Yes
Thermometer	No	No	Yes	No
RTD	Yes (2)	Yes (1, 2)	Yes (2)	Yes (2)
Thermocouple	Yes (2)	Yes (1, 2)	Yes (2)	Yes (2)
Thermistor	Yes	Yes (1)	Yes (2)	Yes (2)

(1) Requires connection to motor control relay.
(2) Requires auxiliary controller not normally supplied with motor.

Selection of a particular type of equipment for indicating and monitoring the temperature of bearings depends upon the function the device is to perform. Table 8-7 summarizes some of the most commonly used devices.

Motor vibration

The vibration limits for electric motors are usually expressed in displacement or velocity levels, and on some occasions acceleration levels are used. Figure 8-31 indicates the levels established by NEMA Stds. MG 1, Part 7, for new machines unloaded.

FIGURE 8-31

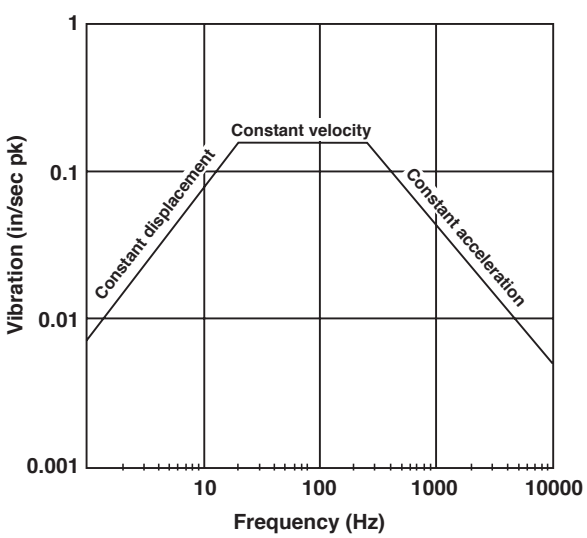

NEMA Stds. MG 1 unfiltered vibration levels–mechanical vibration.

Numerous devices are available to measure vibration levels (either mechanically or electronically), some of which have shutdown capabilities. The size, application and location are factors in determining the best approach to monitor and protect the motor.

The mechanical vibration for medium horsepower alternating current and direct current machines built in a 42 and larger frame, when measured in accordance with NEMA Stds. MG 1, Part 7, shall not exceed a peak vibration velocity of 0.15 inches per second (3.8 mm/s).

Noise and fault analysis

There are methods of analyzing acoustic emissions of ultra-high frequency bearing noise that may not be audible to the human ear. These methods generally measure bearing damage to the balls and raceways, such as spalling and pitting. They are usually employed as part of a predictive maintenance program. Some of the keys to success with these methods are proper selection of the time intervals between testing, location and measurement methods. Properly done, these methods can detect a flaw before any detectable change in vibration or temperature occurs.

There are several other methods available for bearing fault detection, such as acoustic emission, stress wave energy, fiber optics, outer race deflection, spectrum analysis, and lube oil analysis. Some of them can, if done properly, detect faults at very early stages. For more detailed information, see citation 7 in the Reference section.

Unusual failures

Cage instability

Cage instability is manifested by the emitted audible noise, usually in the form of squeals or groans. Unstable cages usually cause intermittent torque transients. The wear pattern from these torques may be seen as a circumferential wear pattern inside the rolling element.

J.W. Kannel and S.S. Bupara offer the following observations on cage instability:

1. The conditions for stable cage motions can be enhanced by reducing the ball-cage co-efficient of friction as much as possible.
2. Stable cage motion is critically dependent on the extent of lubrication at the ball-race contact and, hence, on the quality of lubrication present in the bearing.
3. Instabilities in cage motion may occur if the viscosity of the lubricant is too high.
4. Unstable cage motions can occur in either a ball-guided or a race-guided cage.

"It has been postulated that unstable cage motions can arise as a result of interactions between an unconstrained cage (i.e., free to move within the constraints imposed by the internal clearances) and the rolling elements in the bearing. Energy is supplied to the cage by the frictional force generated at the ball-cage contacts. The motions of the cage can be stabilized

if the cage becomes constrained (e.g., by uneven ball spacings, uneven loads, etc.) or if it dissipates a sufficient portion of its energy at the ball-race interfaces during ball impacts."[8]

Shaft currents

During the past few years, a significant increase in problems associated with shaft voltages and currents has been observed. In many cases, these currents have caused bearing failures, which are identified as fluting or pitting types of failures. There are at least three known causes for the phenomena:

1. Electromagnetic dissymmetry, which is usually inherent in the design and manufacture of the motor.
2. Electrostatic charges (associated with friction) accumulated on the rotor assembly. Shaft couplings and air passage are also known causes.
3. Electrostatic coupling caused by extreme power supplies such as PWM inverters.

Other abnormalities in sinewave power supply associated with grounding, unbalances, harmonic content and high common mode voltages may also result in induced shaft voltages.

In the case of motors used in conjunction with PWM inverters, it is theorized that the terminal motor voltage supplied by the drive is not balanced or symmetrical in some aspect.

Another possible source of this problem is electrostatic coupling, which induces a voltage into the shaft large enough to cause currents that damage the bearings. The high dv/dts associated with the GTO and IGBT transistors are the major source of this problem. The amount of load, rotor speed, method of coupling and type of bearing lubricant can each aggravate the situation. In some cases, insulated bearings may not solve this type of problem.

Regardless of the cause of the induced shaft voltage, if its value exceeds 0.3 to 0.5 V_{RMS} sinewave, it may produce currents large enough to permanently damage the bearings. This problem has heretofore been limited to larger motors, usually 500 frame and up [where the stator outside lamination diameter exceeds 20" (50 cm)]. In most cases, the current passes through both bearings. This condition can be corrected by insulating the outboard bearing on horizontal motors or top bearing on vertical motors.

This approach is usually not practical on smaller motors, where it is now starting to appear when a PWM inverter with IBGTs is used.

Figure 8-37 (top photo) shows a typical bearing when fluting has occurred. Depending upon the amount of running time on the bearing, the raceways may show signs of straight frosting all the way to spalling. Figure 13 (bottom photo) shows pitting caused by electrical currents.

See Appendix II for a summary of the various methods that are being used to eliminate bearing currents.

New technologies

One of the newer lubrication schemes is the oil-air method. that was developed for high-speed spindles where temperature rise was to be kept to a minimum. It is used in place of grease, jet, and oil mist and requires the least amount of lubricant.[10] Oil-air lubrication consists of supplying 0.01-0.06 ml. of oil per fixed time unit by compressed air to the bearing. It is growing in popularity because it is more stable and requires less oil than the oil-mist method and has a maximum speed limit that is considerably higher than grease. Above this limit, jet lubrication is used to minimize temperature rise and carry heat generated away from the bearing. Jet lubrication requires about 3-4 liters/minute of lubricant per bearing.

Ceramic balls are the state of the art for boosting speed and lowering losses. They weigh approximately 60% less than steel balls, which significantly reduces the centrifugal force. This alters the bearing loss characteristics, resulting in lower losses and decreased temperature rise. Ceramic bearing parts are also corrosion resistant, have a higher temperature range, higher hardness (78 Rockwell C), and higher stiffness.[9]

APPENDIX II: METHODS OF REDUCING BEARING CURRENTS IN MOTORS OPERATED ON PWM DRIVES

An estimated 25 percent of all bearing failures on PWM applications are dv/dt- and carrier-frequency related, according to Thomas Lipo, Ph.D., of the University of Wisconsin. The following briefly summarizes the various methods that are being used or investigated to reduce or eliminate damaging bearing currents on AC industrial motors operated on low-voltage PWM drivers:

1. **Insulate shaft bearing journals**

   One or both ends; very effective on larger motors above 200 hp (250 kW).
2. **Insulate bracket bore to bearing OD fit**

   One or both ends; use on vertical and horizontal motors; not as durable as shaft insulation at journal.
3. **Use bearing with insulated ID or OD**

   Ceramic coated bearings are not always effective because the effectiveness of the thin ceramic coating decreases as drive carrier frequency increases.
4. **Hybrid bearings (ceramic rolling elements)**
5. **Grounding brush between shaft and ground**

   Subject to contamination problems and expensive, but it does work in many cases. When both bearings are insulated, a shaft grounding device should be installed.
6. **Install inductive absorbers**

   Placing properly sized inductive components over cables between the motor and drive can create a common mode choke.
7. **Clean up the VFD output waveform**

   Best overall solution and could include single output reactors, limit filters, or motor terminators; can be expensive.
8. **Reduce drive switching frequency to less than 5 kHz**

   Will cause some noise and loss of efficiency.
9. **Reduce or eliminate common-mode voltage**

   Under investigation; can be done by use of filters and reactors.
10. **Improve grounding techniques**
    - A dedicated low-impedance cable between motor and drive per drive manufacturer's instructions.

- Optimize grounding location; eliminate floating grounds.
- Proper cable termination–use of current connectors.

11. **Other options**
    - Resonant link, zero switching in development stage; high cost.
    - Switched reluctance driver with slower waveforms; not yet ready.
    - Mechanical driver or gear; a step backward!

    Note: Some of the above may be used in combination, such as insulated bearings and shaft-grounding brushes.

The motor manufacturers have done a good job of addressing the increased insulation stress on the winding and also offer insulated bearings on larger motors. However, there is no single, clear-cut solution that is economically feasible for 1-200 hp (1-250 kW) motors. When asked for recommended solutions on their smaller motors, the first choice is usually output filters at the drive; this seems to give the best results to date.

REFERENCES

[1] O.V. Thorsen and M. Dalva, "A Survey of Faults on Induction Motors. . . ," *IEEE Transactions on Industrial Applications*, Vol. 31, No. 5, 1995.

[2] *New Life Handbook*, SKF Catalog 140-410, June 1989.

[3] "Research–A Basis for Products of the Future," FAG Kugelfishcer Georg Schafer AG, Pub. No. WL 40 205 EA.

[4] J. Goodall Wuttkowski and E. Loannides, "The Effect of Contaminants on Bearing Life," SKF Bearing Industries.

[5] *NLGL Spokesman*, National Lubricating Grease Institute, April 1983.

[6] ASTM D6185-97(2008) Standard Practice for Evaluating Compatibility of Binary Mixtures.

[7] J. Charles Berggen, "Diagnosing Faults in Rolling Element Bearings, Part II: Alternative Analytical Methods," *Vibrations*, Vol. 4, No. 2, June 1998.

[8] J.W. Kannel and S.S. Bupara, "A Simplified Model of Cage Motion in Angular Contact Bearings Operating in the EHD Lubrication Regime," American Society of Lubrication Engineers and American Mechanical Engineers Joint Lubrication Conference, Kansas City, MO, Oct. 1977.

[9] "Bearing Failure Analysis & Preventive Maintenance," NSK.

OTHER RESOURCES

Bonnett, A.H. "The Cause of Winding Failures in Three-Phase Squirrel Cage Induction Motors." PCI-76-7.

Bonnett, A.H. "Analysis of Winding Failures in Three-Phase Squirrel Cage Induction Motors." PCI-77-4.

Bonnett, A.H. "Prevention of Winding Failures in Three-Phase Squirrel Cage Induction Motors." PCI-78-7.

Bonnett, A.H., and G.C. Soukup. "Rotor Failures in Squirrel Cage Induction Motors," PCI C85-24, IAS IA, Vol. 2, 1986.

Bonnett, A.H., and G.C. Soukup. "Analysis of Rotor Failures in Squirrel Cage Induction Motors. " PCI 87, CH 2495-0/87.

"Bearing Failures and Their Causes." SKF Catalog, PI401E, 1994.

Note: This article was excerpted from *EASA Tech Note 27* (April 1999). It was reviewed and updated as necessary in October 2018.

REFERENCE LIBRARY

One of the best tools for analyzing bearing failures is a reference library of pictures of known causes of bearing failures. The following is a sample of some of the more typical types of failure.

Defective fits/seats (Figure 8-32)

- Loss of internal clearance
- Loose fits
- Skidding
- Creep
- Fretting corrosion

Fatigue failures (Figure 8-33)

- Incipient
- Advanced
- Extreme

Mechanical (Figure 8-34)

- Mounting
- Parasite thrust
- False brinelling
- True brinelling
- Fluting from rotational vibration

Contamination (Figure 8-35)

- Chips in raceway
- Damaged/faulty seals
- Abrasion

Excessive temperature (Figure 8-36)

Shaft Currents (Figure 8-37)

- Pitting
- Fluting
- Welding

Misalignment

- Load paths
- Out-of-round
- Skewed paths
- Edge loading
- Smearing

Improper lubrication

Overspeeding

The following photographs illustrate some of the more common bearing failures listed above.

FIGURE 8-32: DEFECTIVE FITS/SEATS

Fretting corrosion caused by loose fit and vibration.

FIGURE 8-33: FATIGUE

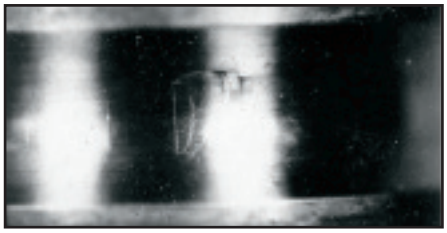

Early stage of spalling caused by excessive preload.

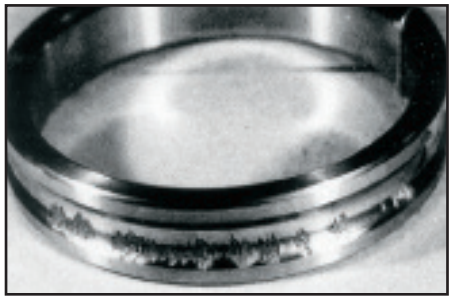

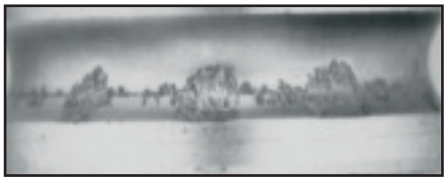

Advanced stages of spalling.

Fatigue fracture of outer ring caused by burrs in the housing bore.

FIGURE 8-34: MECHANICAL

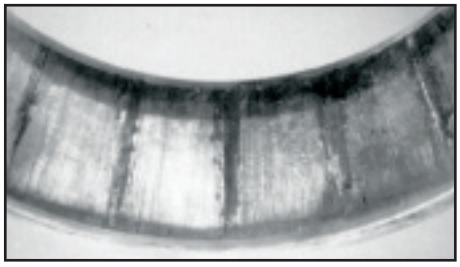

False brinelling and fretting caused by vibration in a non-operating condition.

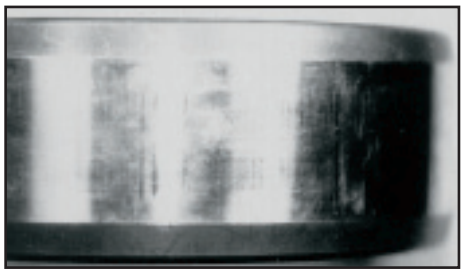

False brinelling and fretting caused by vibration in a non-operating condition.

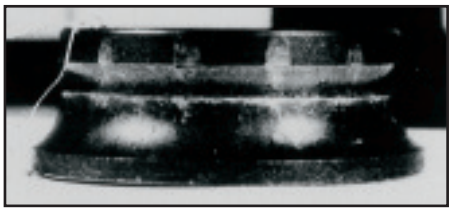

Thrust on low shoulder of angular contact bearing caused by improper installation.

Excessive thrust on a spherical roller bearing.

FIGURE 8-35: CONTAMINATION

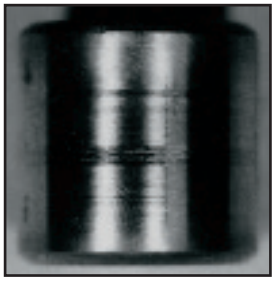

Smear marks on roller caused by debris.

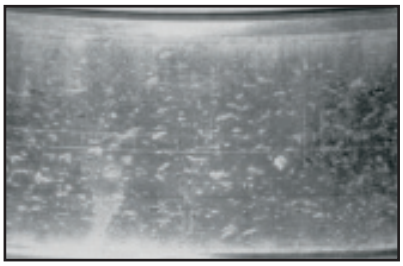

Metallic contamination in raceway.

Damaged caused by water intrusion.

FIGURE 8-36: TEMPERATURE

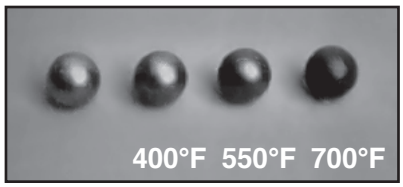

Color variation due to excess temperature.

FIGURE 8-37: SHAFT CURRENTS

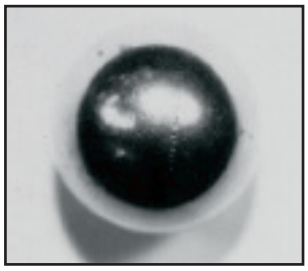

Pitting caused by electrical currents.

Fluting caused by internally generated current.

8.10 BEARING REPAIR AND END PLAY ADJUSTMENT

Repairing sleeve bearings

By Chuck Yung, EASA Senior Technical Support Specialist

Sleeve bearings have been used in almost all sizes of electric motors since motors were invented. Although most motors now have ball bearings for economic reasons, sleeve bearings are still used in fractional horsepower motors, as well as in large motors where the desired bearing life cannot be achieved with rolling-element bearings. The limiting factors in larger motors are the diameter of the bearing and the speed of its rolling element. Sleeve bearings do not work well with radial loads or belted applications. This article focuses on large motor designs (500 to 5000 hp/375 to 3750 kW). Pedestal bearings are not specifically treated, although many of the principles are the same.

In this age of specialization, sleeve bearing repair has largely become an industry niche. Due to economies of scale, many service centers now outsource this work, a trend that has resulted in a general loss of knowledge and associated skills in this area.

PRINCIPLES OF SLEEVE BEARINGS

Sleeve bearings are deceptively simple in appearance (Figure 8-38). Made of soft metal called babbitt (an alloy made mostly of tin and lead; see Table 8-8), they conform to the shape of the shaft and support the load. A film of oil continuously lubricates the bearing and shaft, minimizing surface wear while efficiently cooling the parts. Foreign matter that gets between the bearing and the shaft becomes embedded in the soft babbitt material, thus protecting the harder (and more costly) shaft.

Clearance. Proper clearance between the shaft and bearing keeps the shaft position stable. Too little clearance results in excessive heat due to friction between the shaft and bearing. Too much clearance can lead to unwanted movement (vibration or loss of concentric orbit).

One rule of thumb for bearing-shaft clearance is .001” + .001” per inch (.025 + .010 mm/cm) of shaft diameter. Factors such as rotational speed, bearing diameter/length ratio, oil viscosity and load also each play a role in determining the optimal clearance for a particular bearing.

FIGURE 8-38

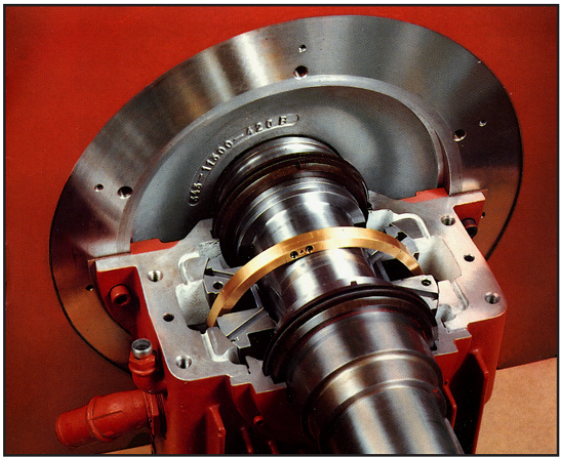

Typical sleeve bearing arrangement, with the top half of the bearing removed for inspection. Note the separable oil ring that can be removed without further disassembly.

Lubrication. The key to sleeve bearing life is adequate lubrication to maintain minimum friction. A continuous flow of oil is provided by one or more oil rings or a forced-oil system. Oil is delivered to the top of the shaft where it fills the oil distribution groove (Figure 2). As the shaft rotates, the oil rings (resting on the shaft) also turn, lifting oil from the sump and transferring it to the bearing and shaft. The oil exits the drain groove at either end and is cooled by recirculating with oil in the reservoir/sump.

Some sleeve bearing designs incorporate guides or wipers that improve the transfer of oil from each ring to the shaft and

TABLE 8-8: BABBITT GRADES AND TEMPERATURES

ASTM grade number	Tin %	Antimon %	Lead %	Copper %	Melting point °F (°C)	Pouring temperature °F (°C)
1	91	4.5	—	4.5	433 (223)	825 (440)
2	89	7.5	—	3.5	466 (241)	795 (424)
3	83	8.3	—	8.3	464 (240)	915 (490)
5	65	15	18	2	358 (181)	690 (365)
7	10	15	75	1.5	464 (240)	640 (337)

While melting temperatures are reasonably close together, the correct pouring temperatures vary considerably among babbitt grades. Pouring at too low a temperature decreases the likelihood of a good bond between babbitt and shell.

FIGURE 8-39

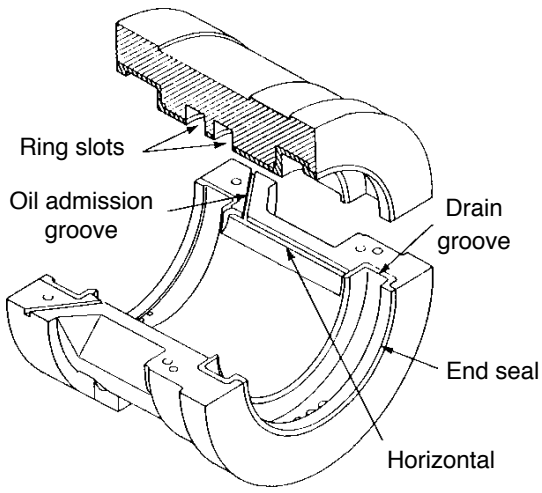

The horizontal distribution groove is critical to bearing performance. The diagonal groove visible at the split line is a channel for forced oil systems. A forced oil system increases the volume of oil through the bearing, which acts to cool the bearing.

bearing. Guides also keep the rings tracking straight, which is especially important in high-speed machines. A ring that tracks erratically turns slower and moves less oil, thereby increasing bearing temperature. Oil rings must be round (within about .002" or .05 mm) in order to rotate at a consistent speed.

The oil distribution groove (Figure 8-39), sometimes called a fly-cut or side-pocket, holds in reserve a continuous supply of oil. This reserve provides sufficient static head pressure to maintain a constant oil film between the bearing and shaft. The end seal also helps maintain the pressure.

The size of the distribution groove can be critical, especially with 2-pole machines. If it is too small, it will not hold enough oil to maintain sufficient head pressure. A "patchy" looking babbitt surface and difficulty in obtaining a good wear pattern suggest overheating due to a distribution groove that is too small. The solution is to enlarge the groove.

(Note: Sleeve bearings should not be grease lubricated! Although grease-lubricated sleeve bearings can still be found on some very old designs, they do not work well and should be avoided.)

BABBITT GRADE

When examining a sleeve bearing, one of the first tasks is to determine which grade of babbitt was used. Babbitt grades are selected for specific applications, based on such factors as shaft surface speed, lubrication type and dynamic load. Other considerations include temperature and the ease with which dirt can be embedded (e.g., contaminants are much more prevalent in a cement mill than in a food processing plant).

Babbitt grades are classified according to the relative amounts of tin, antimony, lead and copper they contain (Table 8-8). ASTM alloy grades range from 1 to 19, although babbitt grades 1, 2 and 3 are the most frequently encountered. Tin is the major component of grades 1 through 5, whereas lead is the main ingredient in grades 6 through 19. Lead babbitt has a lower load-carrying capacity than tin babbitt, and is much less resistant to corrosion.

In general, tin-based babbitt bearings for electric motors have load-carrying capacities of 800 to 1500 psi (5500 to 10300 kPa). Lead-based babbitt bearings have capacities of 800 to 1200 psi (5500 to 8270 kPa). The babbitt used for a lightweight, high-rpm induction motor will differ from that used in a large, low-speed synchronous ball-mill motor.

Some service centers find it convenient to use the same grade of babbitt for all bearings. Companies specializing in babbitt bearing repair are more likely to have the equipment and the babbitt inventory to duplicate the original babbitt grade. To confirm babbitt grade, have a sample analyzed by a lab or contact the OEM for the original grade.

COMMON CAUSES AND REMEDIES FOR SLEEVE BEARING FAILURE

Babbitt bearing failures ultimately result from heat. Some of the more common contributing causes and remedies are given below.

Contamination. Methods for controlling contamination–dirt or product in the oil–vary from frequent oil changes, to monitoring oil condition (tribology), to testing for corrosive material in the atmosphere. Installations where acids are present will require more frequent monitoring than "clean" installations. In some cases, special seals may be effective in excluding airborne contaminants. This is helpful with small-particle abrasive dusts, which are difficult to exclude using conventional labyrinth seals.

Shaft currents. A sleeve bearing can withstand higher shaft currents than a ball bearing, but shaft currents may still be a source of trouble. The magnetic dissymmetry often responsible for these currents is more common in large machines with segmented laminations. These larger machines are also more likely to have sleeve bearings.

Because sleeve bearings have larger surface areas than ball bearings, they can withstand higher voltages before damage occurs. Shaft voltages in excess of 100 millivolts are a concern for ball bearings, whereas they become problematic for sleeve bearings above 200 millivolts. The application of VFDs may cause significantly higher shaft voltages (10 to 25 volts), resulting in rapid bearing damage.

Even when a bearing is properly insulated, problems can occur. For example, conductive contaminants such as coal dust or carbon black may build up in the oil, effectively bypassing the bearing insulation. Water may cause rust, which can also bypass the insulation. This is especially true of porous insulating materials such as micarta. Porous insulating materials can be protected using spray-on electrical insulating varnishes that help seal the surface of the material.

Several manufacturers use an aluminum oxide spray-powder to insulate the bearing shell. This provides a fairly durable insulation but makes rebabbitting difficult. The thin coating is easily chipped by improper handling, and rust caused by exposure to water can compromise its insulating

properties. The coating can be resealed using clear aerosol spray insulation. Care should be taken to dry the bearing first, to avoid sealing moisture in.

Insulating a bearing shell generally adds about 10°F (6°C) to its operating temperature. If bearing temperature is already high, it may be prudent to consider adding a forced lubrication system.

An alternate method (used by one manufacturer) is to apply a ceramic coating directly on the shaft journal to insulate the bearing-to-shaft path. The ceramic coating, which is then precision-ground to obtain the desired size and surface finish, has the added benefit of reducing friction and corrosion.

Some larger machines have an insulated bearing pedestal, rather than an insulated bearing shell. This is usually accomplished with a sheet of phenolic material. Bolts and dowel pins must also be insulated. When evaluating whether to insulate the pedestal or the bearing, be sure to consider rotor weight, surface area and compressive strength of the insulating material. Insulating the pedestal base offers one important advantage for large applications: it distributes the weight over a larger surface area.

Additional concerns regarding shaft currents include:

- Conductive paint and grounding cables installed improperly by well-meaning plant personnel.
- Oil that goes unchanged for very long periods of time. Brass particles worn from the oil rings may make the oil conductive.
- For bearings insulated with an oxide-coated shell, the oil-ring slots should be inspected for overspray. As the rings rotate, the abrasive action of the oversprayed material will quickly wear down oil rings.

If installed incorrectly, temperature sensors, force-lubrication piping or other hardware can also bypass bearing insulation. This can be difficult to detect, since these items are often removed and left on-site when a motor is removed for repair. The service center may do everything right, yet the bearing fails in a short time–with evidence of shaft currents.

To verify the integrity of an insulated bearing, use a piece of insulation material (such as mylar) to isolate the non-insulated end. Lift the shaft and place the insulation between the shaft and bearing. (It is sometimes more convenient to place the insulation between the shaft and labyrinth seal with the bearing removed.) Next, use an ohmmeter or megohmmeter to verify that there is no continuity between the shaft and bearing of the insulated end. One megohm is adequate resistance.

Oil level. If oil level information is available from the manufacturer, follow it. If not, as a general guideline, fill the reservoir to a level that immerses approximately a quarter of the oil ring circumference, or about a fifth of its diameter (Figure 8-40). Too low a stationary oil level means it will be dangerously low when some oil is in play (in the bearing, dripping down the inside of the chamber, etc.). Too high an oil level increases friction between oil and rings, so the rings will turn slower, supplying less oil to the bearing.

Under-lubrication. This problem may result from oil splashing (missing ring guides, for instance), excess labyrinth seal clearance (oil migrates from the chamber), or a pressure differential between the outside air and the interior of the bearing chamber (see Figure 8-41). Blocked vents can create a vacuum or positive pressure within the bearing chamber, causing oil to be carried out of the chamber by the passage of

FIGURE 8-40

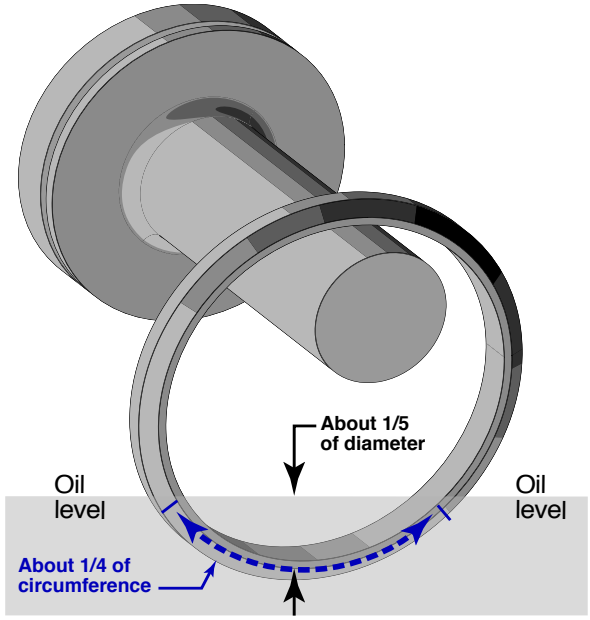

Oil level should adhere to the manufacturer's recommendations, when available. The rule of thumb is that the bottom of the oil rings should be immersed to approximately one-quarter of their circumference, or about one-fifth of their diameter.

FIGURE 8-41

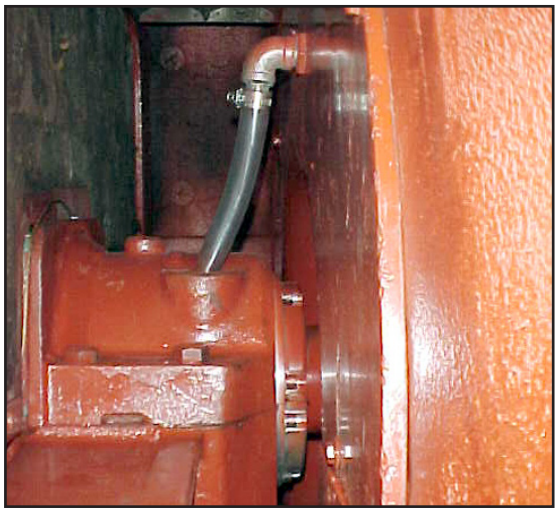

Several schemes have been used for venting the bearing chamber or inboard labyrinth seal to keep pressure (or vacuum) from developing in the oil chamber. This chamber is vented to the air baffle.

air. Force-feed lubrication systems may be "adjusted" to the point that problems arise.

Over-lubrication. This can be as much of a problem as under-lubrication. On forced-oil systems, for example, the orifice that meters the oil supply for each bearing (Figure 8-42) often gets lost or is intentionally removed. Orifice size and system pressure determine the correct oil supply, so a missing orifice usually results in the delivery of too much oil to the bearings (even if the pressure gauge shows the proper reading). The orifice is contained within the plumbing (on the pressure side of the oil supply) or in the motor end bracket, so it is difficult to check while the motor is in service.

FIGURE 8-42

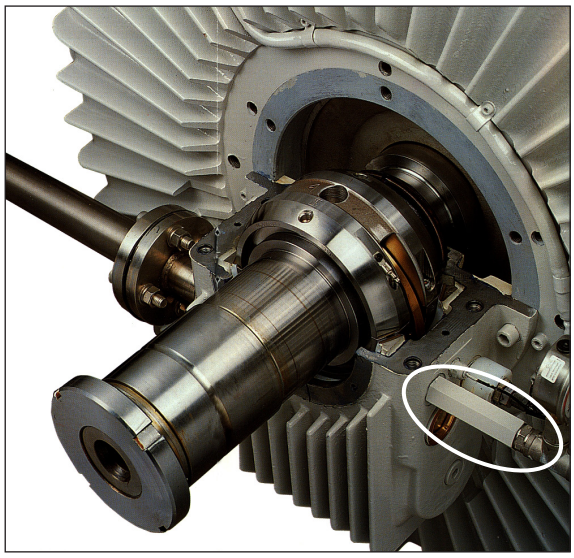

The spherical (or "self-aligning") bearing gets its name from the shape of its outside diameter. It is not truly "self-aligning," so proper assembly procedure is critical to its performance. Note the location of the oil-metering orifice on this spherical bearing.

To determine the oil volume supplied by a forced lubrication system, perform the following simple check. With the motor stopped and the forced lubrication system operating, open the drain line and measure the quantity of oil circulated in one minute (timed). Compare that amount to the OEM specifications. If the volume of oil is considerably more than that specified by the OEM, the orifice has probably been removed or modified. For a 3" to 6" (75 to 150 cm) shaft, the normal flow is 1/2 to 1 gpm (1.9 to 3.8 lpm).

Oil leaks. When an oil leak is suspected, use a manometer to measure the pressure differential between the inside of the bearing chamber and the motor enclosure. A significant difference can cause atomized oil to be carried past the seals in the air stream. Historically, this has been a problem with some 2-pole designs. Venting the inner labyrinth seal area behind the bearing chamber to the atmosphere is more effective than venting the bearing chamber, because air drawn into the motor can bypass the bearing chamber.

Several manufacturers' 2-pole designs use flexible hose to vent the inside labyrinth seal to the air baffle (Figure 8-41). The axial position of the fan on these designs, however, greatly affects the draft on the hose, resulting in chronic oil-loss problems. Venting the inner labyrinth seal to the atmosphere usually works better.

Oil viscosity. The oil viscosity can be very important, contributing to the stiffness of the shaft/bearing assembly. Some designs are prone to vibration problems if the wrong oil weight is used. Consult the OEM manual for specific information about recommended oils, especially if a vibration problem seems to defy logic. Sometimes an application limits the choice of viscosity. In the food industry, for example, the FDA requires the use of mineral oil to keep food safe.

Bearing-to-housing clearance. Although bearing-to-shaft clearance usually receives considerable attention (See "Sleeve bearing clearance depends on many factors" on Page 8-17.), bearing-to-housing clearance is often overlooked. The different coefficients of expansion for the steel shaft/brass shell/babbitt bearing/cast-iron housing make this clearance essential. If the bearing-to-housing fit has zero clearance, the bearing shell cannot expand outwards as it heats up. Thermal expansion will therefore cause the bearing to grow "in," reducing the bearing-to-shaft clearance. If the bearing-to-shaft clearance becomes too tight, the bearing will fail. Too much clearance between the bearing and housing will cause high vibration.

Most electric motor sleeve bearings perform best with housing clearances of 0.001" to 0.003" (.025 to .040 mm). This clearance may be determined by measuring the bearing OD and housing ID (using a micrometer), or by using Plastigage or similar products to gauge the clearance. One advantage of the Plastigage method is that it is more likely to reveal elliptical parts. It also gauges the clearance only in the actual fit area. This provides an accurate measurement of clearance for bearings supported by a narrow saddle.

Spherical bearing housings can be especially difficult to measure, making Plastigage more practical. When using Plastigage, it is important to clean any sealant from the flat fit between the bearing bracket and cap, and to fully torque the bolts to insure an accurate reading.

Spherical bearings are sometimes called self-aligning bearings (Figure 8-42). While this is true during assembly, the spherical bearing rarely changes position once the bearing housing is closed. It is essential to follow the correct procedure when assembling spherical bearings. First, install the bottom halves of both bearings. Next, lift the shaft slightly, first one end and then the other, allowing it to settle the bottom halves of bearings into position. Only then should the top halves of the bearings and housings be installed. Failure to observe this simple procedure will result in misaligned bearings.

Field repairs to correct loose bearing housings include shimming and lapping the split-line of the top half of the housing. It is relatively easy to correct excess looseness by adding shims between the top half of the bearing and the housing. An alternative repair is to machine the split-line of the top half of the housing. When a machine shop is not convenient, clamp emory cloth on a flat surface and stroke the top half split-line to remove material and achieve the desired clearance. It is essential to maintain a flat surface, so this is best done on a flat, machined work surface.

Note: At least one manufacturer (now defunct) designed sleeve bearing housings with a loose fit, outfitting the top bracket with set screws which were adjusted to obtain the desired tightness. The same manufacturer also deliberately bored babbitt bearings off-center (the bore was not concentric to the OD), calling them "high-lift" bearings.

ALIGNMENT

Alignment is generally considered only when a motor or its driven equipment have been recently installed or changed. When a motor or pump has been changed, or when the base has been reworked, realignment is necessary.

Thermal expansion (or contraction) must be considered when aligning machinery. With some equipment, "cold" alignment must include a deliberate misalignment to correct for temperature differences between motor and driven equipment. Even the term "cold alignment" may be a misnomer. Consider cryogenic equipment, for example, where the operating temperature is considerably lower than ambient. In any event, final alignment must consider the operating temperature of both driver and driven equipment.

Simplification of laser alignment procedures makes it tempting to train less-experienced technicians to operate the equipment. In doing so, it is important to ensure that they understand alignment. Perfect "cold" (ambient) alignment is meaningless. Alignment at operating temperature is what counts.

Sleeve-bearing machines are particularly sensitive to misalignment. Severe misalignment is obvious when the points of contact on a sleeve bearing are at diagonally opposite corners of the bearing. Rotor speed is not the only consideration when determining required alignment accuracy. At any given speed, alignment becomes more critical as sleeve bearing length increases.

DETERMINING THE CAUSE OF FAILURE

Determining the cause of failure is critical if the goal is to correct the problem. Analysis of sleeve bearing failure requires knowledge of the motor's history. Has it experienced similar failures in the past? How often has the failure occurred? Is there any common mode to the failures? Repeated failure of the ODE bearing often indicates an alignment problem. Failure during certain seasons may be a symptom of foundation movement resulting from monsoon flooding, spring thaws or ground freezing as winter sets in. (See Figure 8-43 for examples of damage.)

Oil condition. Unfortunately, by the time a service center receives the motor, the babbitt may be a puddle in the bottom of the oil chamber. The condition of the oil, however, may be helpful in narrowing down the possible causes of failure. Mud in the oil chamber points to contamination as the probable cause of failure. A milky emulsion indicates water mixed with the oil. If the oil looks new, but the bearing is wiped out, someone has added oil before sending the motor in for evaluation. This may indicate that the oil level was low enough to motivate the responsible party to "cover his tail." Human nature doesn't make it any easier to determine cause of failure.

FIGURE 8-43

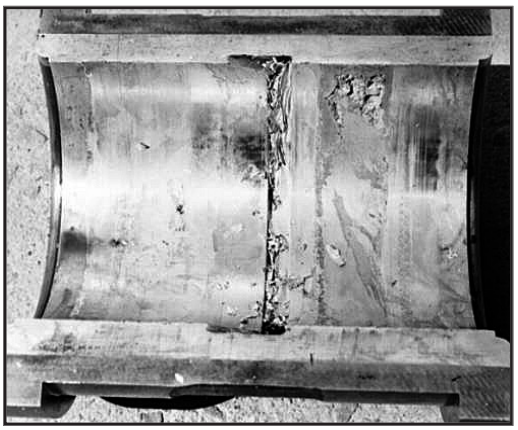

Wiping of sleeve bearing showing resolidified babbitt in the central circumferential oil groove.

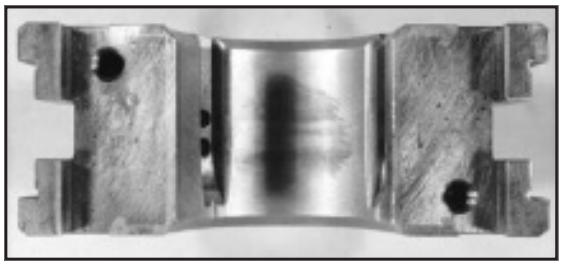

Minor run in bottom of bearing subjected to a vertical load.

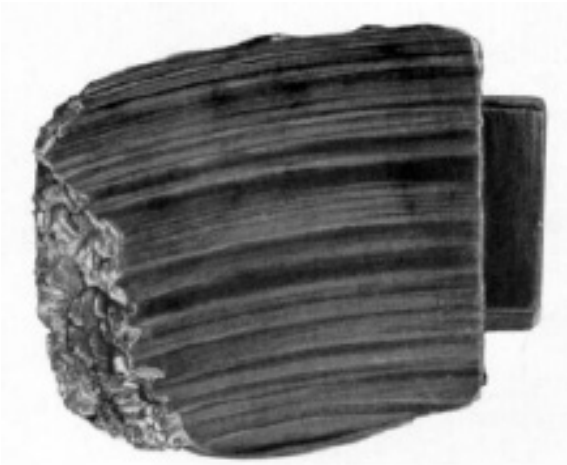

Wiping of babbitt thrust pad caused by successive starts under excessive load.

Shaft condition. Evidence of heavy wear on one thrust shoulder of a bearing (called thrusting) can be caused by improper axial placement during installation. It also may indicate a defective coupling or machine settling. Some couplings require lubrication, but safety guards make them difficult to access. A "frozen" coupling will not allow the rotor any axial movement.

TABLE 8-9: END PLAY AND ROTOR FLOAT LIMITS FOR COUPLED SLEEVE BEARING HORIZONTAL MOTORS

Machine	Synchronous speed (rpm)	Minimum motor rotor end float	Maximum coupling end float*
500 hp (400 kW) and below	1800 and below	0.25” (6.5 mm)	0.09” (2.3 mm)
300 hp (250 kW) to 500 hp (400 kW) inclusive	3600 and 3000	0.50” (13 mm)	0.19” (4.8 mm)
600 hp (500 kW) and higher	All speeds	0.50” (13 mm)	0.19” (4.8 mm)
* Couplings with elastic axial centering forces are usually satisfactory with these precautions. NEMA Stds. MG 1, 20.29.2			

Machine settling is a less-common cause of this type of wear. For machinery subject to long coast-down times, precise leveling of the shafts is critical. The use of thrust-limiting couplings is also essential to prevent thrust-shoulder contact.

The thrust shoulder of a sleeve bearing is not intended to carry sustained thrust loads. Its only purpose is to limit the axial movement of the shaft during start-up and coast-down. Evidence of wear on a thrust surface indicates a problem with the application, and steps should be taken to limit the coupling end float. See Table 8-9 and NEMA Stds. MG 1, 20.29.2 for limits.

Condition of labyrinth seals. The area of contact with the labyrinth seal may give further clues about the failure. Contact anywhere other than at the bottom may indicate misalignment. Dirty, oil-soaked windings are a good indication of an ongoing oil leak, caused by excessive clearance of the labyrinth seal or by a pressure-differential between the oil chamber and atmosphere. The longer the leak has been present, the more dirt will be found mixed into the oil. (This mud also restricts airflow through the windings, and the oil can damage insulation.)

Perhaps a vent has been inadvertently blocked, or “mud-daubing” insects have nested in the vent opening (not uncommon in cast-in vents, especially in warmer climates). It is important to inspect these areas before any parts are cleaned. Evidence lost may prevent correct interpretation of the failure.

Excess clearance of labyrinth seals can result from a bearing failure that permits the shaft to contact the seal. Typical diametrical clearance for the labyrinth seal of a sleeve bearing machine is 0.007” to 0.020” (.18 to .51 mm), depending on speed and shaft diameter.

(Note: Removable labyrinth seals should be sealed during assembly using Permatex, silicon or similar products. Non-hardening products are preferred to facilitate future disassembly.)

If the shaft has been repaired previously, one easily missed cause of oil leaks is the anti-migration groove machined in the shaft just inside the bearing chamber. Centrifugal force prevents oil from migrating past the labyrinth seal while the shaft is rotating. The groove should be just inboard of the labyrinth seal (Figure 8-44).

If the **oilers** are adjustable, verify that they are set to the correct oil level. Replacement oilers are sometimes installed and adjusted incorrectly. Automatic oilers are available in several styles. The relationship of oil level to piping entrance differs considerably among them. It is not unusual to have to change the piping configuration when changing an oiler. An automatic oiler set too high will often cause an oil leak.

FIGURE 8-44

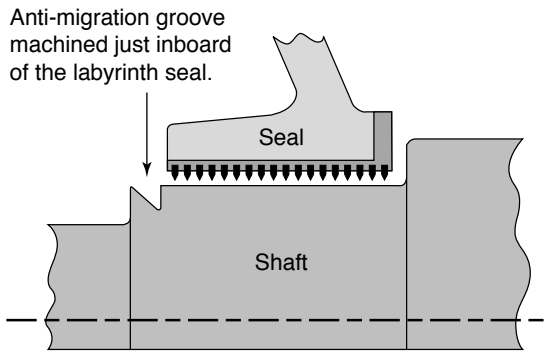

Anti-migration groove.

If one oiler is defective, it is advisable to change both in order to avoid confusion in setting or checking oil level. In one instance, an end-user changed the stand-tube oiler on one end of a low-speed 700 hp (940 kW) motor and then carefully set the oil level to the center of the tube on *each end* of the motor. Unfortunately, he didn’t notice that one tube was 3” (7.6 cm) tall and the other was 8” (20 cm) tall, despite the OEM oil-level nameplate. The result? A new shaft, stator rewind and rotor rebar (with restacks of the rotor and stator), not to mention rebabbitting the bearing. The end-user wanted to save the cost of the OEM oiler; it backfired.

NEW AND REBUILT SLEEVE BEARINGS

Inspection. Inspection of new or rebuilt babbitt bearings should include nondestructive testing (NDT). Ultrasound inspection is the best way to evaluate the bond between bearing shell and babbitt. Some end users have adopted U.S. Naval specifications, which require 80% minimum bond for the load zone and 40% for the overall bearing. This is something of a judgement call, as the percent bond in the top half of a bearing is not as critical as in the load zone. Likewise, the percent bond for a 3600 rpm machine is more critical than for a very low-speed application. Common problems affecting the bond are: presence of oil in the bearing shell (or in the material used to seal openings in the shell), failure to tin the shell before

FIGURE 8-45

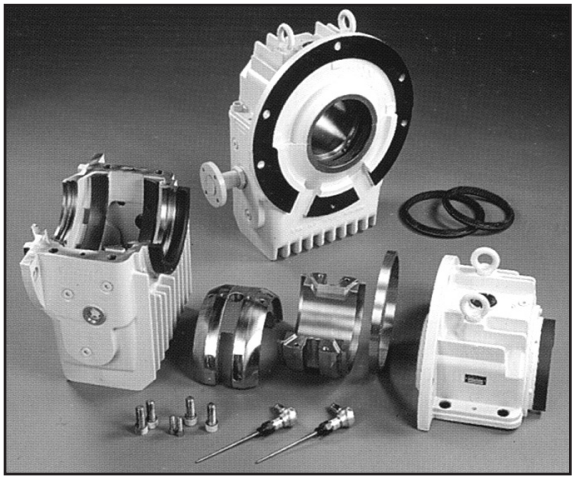

Bearing chamber and components.

rebabbitting, or pouring the babbitt at the wrong temperature (see Table 8-8).

Fitting. Fitting a new sleeve bearing is an important part of the assembly process. Install the bottom half of each bearing and then spin the rotor with the bearing journal dry (or with a small amount of oil wiped onto the journal) to establish a wear pattern quickly. Thrust the shaft axially several times while it rotates. Scraping of high spots is generally done using a babbitt knife or bearing scraper, followed by polishing with a Scotchbrite pad.

The bearing should be thoroughly cleaned after each fitting before being rolled back in for further fitting. The objective is a minimum of 60% contact centered in the bottom half, with no contact at the corners or top.

As a practical matter, most technicians concentrate on the bottom half. Then they install the bearing top half and securely bolt the top cap in place to retain it for a final spin-and-inspection. This allows them to verify that no pinch-points exist. Too tight a bearing-to-housing fit may distort the bearing shell and cause bearing-to-shaft contact that was not evident during the initial fitting process. When the shaft centerline is not perpendicular to the stator-bracket fit, the top bracket half may further alter the bearing-to-shaft alignment.

Start-up. Test-running a motor with a newly-fitted bearing requires some caution, because actual contact between the bearing and shaft will result in rapid heating. A high spot on the babbitt bearing surface will interrupt the oil film on which the shaft rides. The resulting friction will produce heat that can damage the bearing.

Two-pole machines require special care on start-up, because of the higher surface speeds. When test running a low-speed machine, the technician can detect a rapid increase in bearing temperature and stop the machine before damage occurs. With a 2-pole machine, cause and effect are almost simultaneous.

One trick for early detection of a wiping bearing employs a vibration analyzer. Place the probe axially on the bearing housing, with the instrument set to read velocity. The friction caused by a wiping bearing will be indicated as a mechanical rub as the velocity starts to climb, even before the temperature changes. The extra few seconds of warning obtained in this manner have saved many 2-pole sleeve bearings.

End float and magnetic center. When a sleeve bearing motor is energized, the rotor should remain centered between the thrust shoulders. During coast-down the rotor may float and contact either thrust shoulder, especially if the motor is not level. To avoid possible damage during extended coast-down, plug-reverse the motor (with reduced voltage) to stop it quickly. When this is not practical, use mechanical means to position the shaft near its mechanical center.

End float and magnetic center are important considerations when rebuilding sleeve-bearing machines. The magnetic center should be clearly marked during the final test run. A suggested procedure is to spray the shaft extension with blue layout fluid and then clearly scribe the magnetic center.

Total end float should be checked. The mechanical center and the magnetic center should closely coincide. In some cases, the magnetic center may "hunt," especially with 2-pole machines which have weaker axial centering forces.

Bearing temperature. Bearing temperature varies according to rotor weight, rotational speed and oil used. Sleeve bearing temperatures above 150°F (65°C) can usually be improved by fitting. Some motor designs are subject to inherently higher temperatures, in rare cases as high as 220°F (105°C). When monitoring bearing temperatures during no-load test-runs, it is important to factor in the temperature rise of the motor. See Table 8-10 for a general rule of thumb regarding monitoring of bearing temperatures.

TABLE 8-10: MONITORING BEARING TEMPERATURES

	Lubricants	
	Standard	Synthetic
Normal	176°F (80°C) or lower	230°F (110°C)
Alarm	194°F (90°C)	248°F (120°C)
Shutdown	212°F (100°C)	266°F (130°C)

Babbitt bearings require extra attention during inspection, especially when the purpose is to determine the cause of failure. Treating the symptoms rather than the problem is common because of the difficulty in interpreting evidence. Working with the end-user is essential when trying to determine why a sleeve bearing failed. Machine history and knowledge of the application system–not just the motor–are key to satisfactory service.

Note: This article was first published as *EASA Tech Note 38* (January 2001). It was reviewed and updated as necessary in October 2018.

Procedures for checking end play in ball bearing machines

By Chuck Yung, EASA Senior Technical Support Specialist

After repair, an electric motor ran fine in the service center but developed high bearing temperatures shortly after the customer installed it. The bearings failed after only a few hours of operation at full load.

The first response for most technicians in this situation would be to suspect an alignment problem. But another possibility to consider is insufficient end play. An electric motor must have room for thermal expansion of the shaft, or bearing life will be reduced greatly.

Because the frame dissipates heat generated in the rotor and windings, the rotor/shaft assembly is considerably hotter than the stator frame. Thermal expansion of the shaft therefore exceeds that of the frame. To compensate, allowance must be made for the shaft to "grow" axially. Failure to do so will preload both bearings, causing rapid failure of the one with the lower load-carrying capacity. That usually is the smaller bearing on the opposite drive end (ODE).

For carbon steel shafts, the length will increase 0.0000067" per inch of shaft length per °F of temperature change (0.0000117 mm per millimeter of shaft length per °C). A 30" (762 mm) long shaft would therefore grow by 0.016" (0.4 mm) if subjected to a temperature rise of 80°F (45°C):

30 x 0.0000067 x 80 = 0.016" increase in length

762 x 0.0000117 x 45 = 0.4 mm increase in length

Unless there is at least that much extra room between one bearing and the shoulder in the end bracket, thermal growth will preload the bearing.

Most designs "locate" one end of the shaft–usually the drive end (DE)–and provide sufficient room at the other end for thermal expansion. That means the DE bearing is held captive by the housing and bearing cap to prevent axial displacement of the coupling. Too much "play" in the drive end of the motor shaft can damage the driven equipment.

When a bearing failure damages the shaft, it is often difficult or impossible to determine the original location of the bearing shoulder. This uncertainty requires a reliable method for determining whether the repaired motor has adequate provision for thermal expansion. By following some basic steps, the assembly mechanic can assure that the motor has this room.

Measure room available for shaft growth. With both end brackets installed, and the bearing caps tight, place a dial indicator on the ODE bracket to measure axial shaft movement. Using a soft-face mallet, tap the shaft towards the DE, zero the indicator, and then tap the shaft towards the ODE. The only movement should be internal play in the bearing.

Next, loosen both bearing caps and move the shaft towards the ODE. The measurement obtained is the available room for thermal growth of the shaft. There must be enough room for the shaft to grow thermally without preloading the bearings (compressive preload → ←). (**Rule of thumb**: Allow approximately 0.010" per foot (~1 mm per meter) of shaft length between bearings.)

FIGURE 8-46

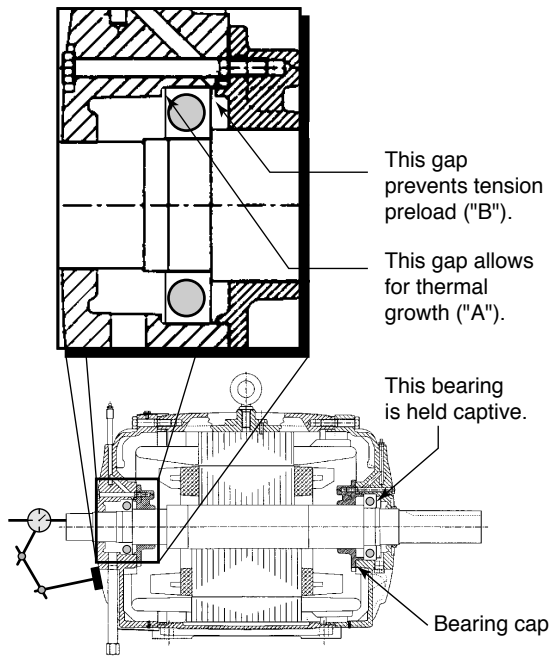

Proper end play.

To increase the room for thermal growth, remove the ODE bracket and machine shoulder "A" (Figure 8-46).

Make sure bearing caps do not preload bearings. If the motor has enough allowance for thermal growth, the last step is to make sure the bearing caps are not preloading the bearings by pulling outwards (tension preload). To check this, first tighten the DE bearing cap. This pulls the bearing into its normal operating position.

Now zero the indicator, loosen the DE bearing cap and tighten the ODE bearing cap. If the shaft moves, then the bearing caps are preloading the bearings. If this step reveals a tension preload (← →), either put a spacer between the ODE bearing cap and bracket or machine the bearing cap shoulder.

If preload is not corrected, one of two things will happen. Either a bearing will be dislocated from the shoulder, or the bearing L_{10h} life will be decreased. The reduction in L_{10h} bearing life will be proportional to the amount of preload. By way of example, a .040" (1 mm) preload can decrease L_{10h} bearing life to a matter of hours.

Tip: When a stock motor is modified for a direct-couple application, the DE roller bearing should be replaced with a standard ball bearing. Because the roller bearing is held captive, and the ODE bearing served to locate the shaft, this modification requires that the end play be adjusted.

One approach would be to assemble the motor, check the end play as described above, and then dismantle it to do the appropriate machine work. A good shortcut is to machine 0.020" (0.5 mm) from the ODE bearing cap face "B" (Figure 8-46) and then machine the bearing fit of the ODE end bracket "A" (Figure 8-46) 0.040" (1 mm) deeper. This ensures that the bearings will not be pre-loaded in either direction. Final end play checks should still be made as outlined above, but the shortcut virtually guarantees that the motor will not have to be dismantled for further machine work.

BALL-TO-ROLLER CONVERSION

- Measure the DE shaft journal. The journal fit for a roller bearing is larger than that of a corresponding ball bearing, and mounting a roller bearing on a journal that is not within tolerance will result in premature bearing failure. If necessary, electro-plate the journal to size.
- A ball bearing on the DE is the locating end, and the ODE requires room for thermal expansion. When installing a roller bearing on the DE, the ODE bearing must become the locating (captured) end.
- Measure the ODE housing depth, subtract the width of the bearing and the lip of the bearing cap.
- Machine a spacer of that dimension and place it in the ODE bearing housing.
- Be sure to use high pressure grease for the roller bearing, and install an auxiliary nameplate on the motor to indicate the DE is equipped with a roller bearing.

Note: This article was first published as *EASA Tech Note 42* (October 2005). It was reviewed and updated as necessary in September 2019.

8.11 REFERENCED STANDARDS

The following standards are referenced in this section of the *EASA Technical Manual*.

ANSI/ABMA Std. 7-1995 (R2001, S2013): *Shaft and Housing Fits for Metric Radial Ball and Roller Bearings (Except Tapered Roller Bearings) Conforming to Basic Boundary Plan*. American Bearing Manufacturers Association, Inc. and American National Standards Institute. New York, NY, 2001, 2013.

ANSI/ABMA Std. 20-2011: *Radial Bearings of Ball, Cylindrical Roller and Spherical Roller Types–Metric Design*. American Bearing Manufacturers Association, Inc. and American National Standards Institute. New York, NY, 2011.

ISO Std. 15:2017: *Rolling Bearings–Radial Bearings: Boundary Dimensions, General Plan*. International Organization for Standardization. Geneva, Switzerland, 2011.

ISO Std. 104:2015: *Rolling Bearings - Thrust Bearings - Boundary Dimensions, General Plan*. International Organization for Standardization. Geneva, Switzerland, 2015.

ISO Std. 113:2010: *Rolling Bearings - Plummer Block Housings - Boundary Dimensions*. International Organization for Standardization. Geneva, Switzerland, 2010.

NEMA Stds. MG 1-2016: *Motors and Generators*. National Electrical Manufacturers Association. Rosslyn, VA, 2016.

This page intentionally left blank.